cs/ee/ids 143 Communication Networks

Chapter 4 Internetworking

Text: Walrand & Parekh, 2010

Steven Low
CMS, EE, Caltech

Warning

These notes are not self-contained,
probably not understandable,
unless you also were in the lecture

They are supplement to, not replacement for class attendance

Recap: Internet overview

Some basic mechanisms

- Packet switching
- Addressing
- Routing
  - hierarchical (AS), forwarding, shortest path routing, software defined networking
- Transport
  - congestion control, error recovery
- Medium access control
- Internetworking

Project

Recap: Internet overview

Some basic concepts

- Performance metrics
  - Throughput, line rate (bandwidth), line capacity
  - Delay, delay jitter
- Scalability
  - location-based routing, hierarchical
  - best-effort service, end-to-end principle
- Layering

Protocol stack

Network mechanisms implemented as protocol stack

Each layer designed separately, evolves asynchronously

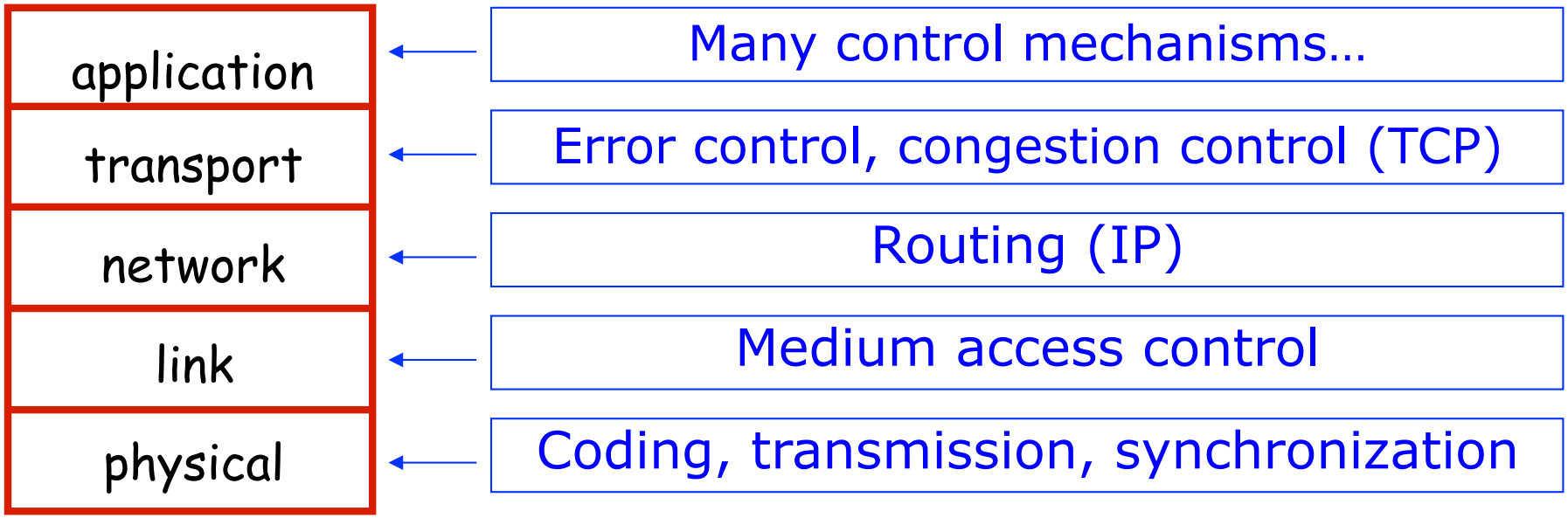

Recap: Internet overview

Some basic analytic tools

- Convex optimization
  - We will use it to understand equilibrium properties of TCP congestion control
- Control and dynamical system
  - We will use it to understand stability properties of TCP congestion control
- Queueing theory
  - We will use it to understand statistical properties of wireless MAC

Recap: Routing

Covered layer 3 routing

- Autonomous systems (AS)
  - Defined by administrative domains
- Inter-AS: BGP
  - Policy based
- Intra-AS: Dijkstra, Bellman-Ford
  - Shortest-path routing

Error recovery

- Can be used in link, transport, or application layer
- Parity check, FEC, network coding

This week

Internetworking

- Routing across LANs, layer2-layer3
- DHCP
- NAT

Transport layer

- Connection setup
- Error recovery: retransmission
- Congestion control

Internetworks

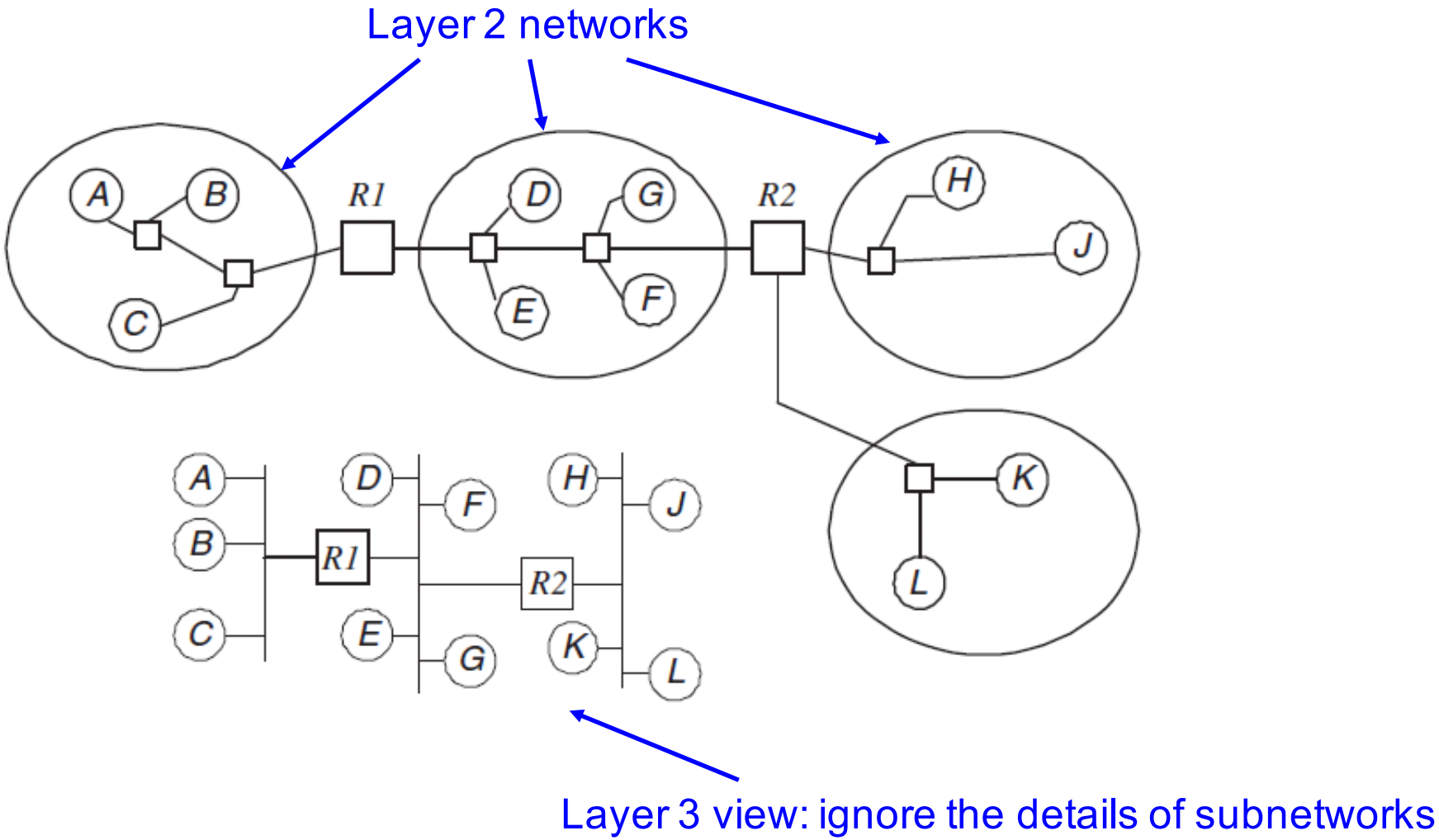

Each (layer 2) network

- full connectivity: every node can reach every other node
- broadcast capable: every node (inc. router) can broadcast to all other nodes

Internetworks

an Ethernet network (layer 2)

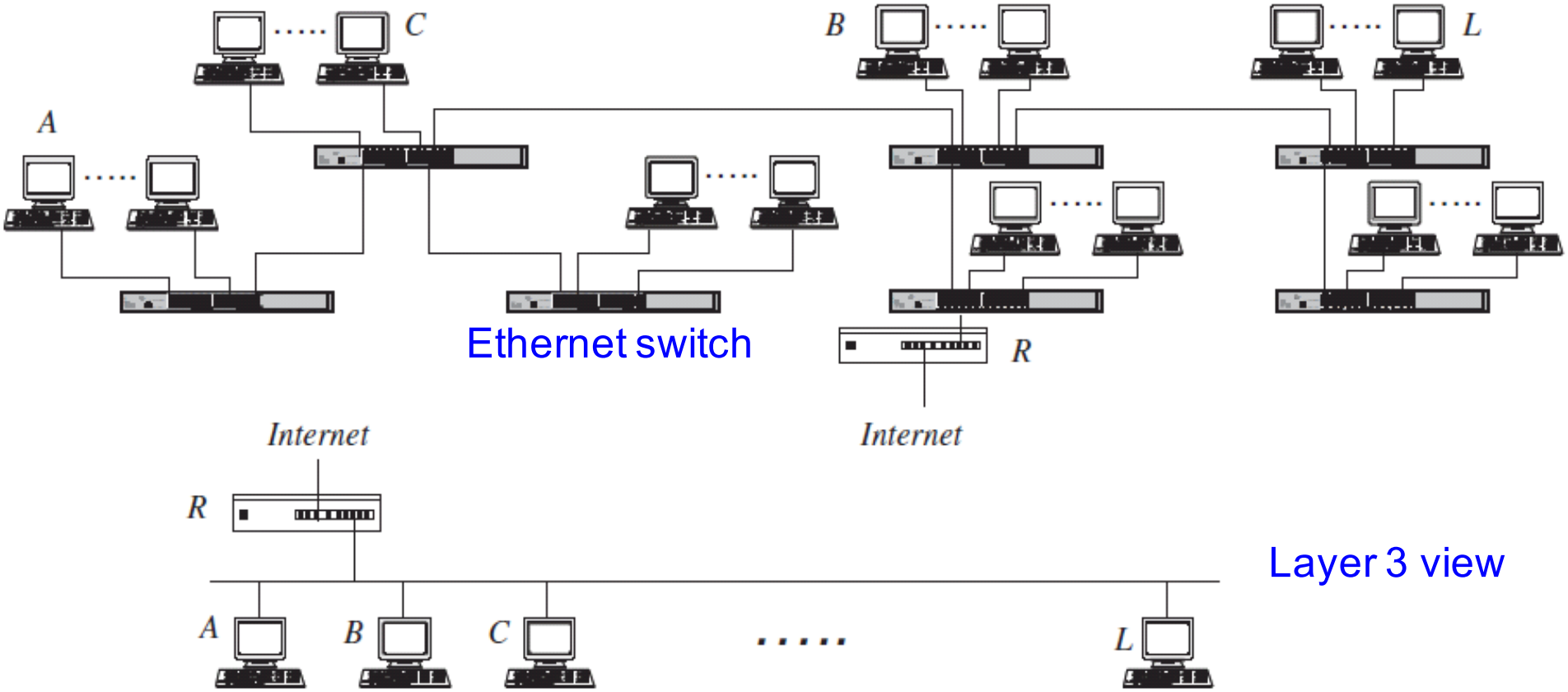

Layer 3 view

Addresses, Subnet mask, Gateway

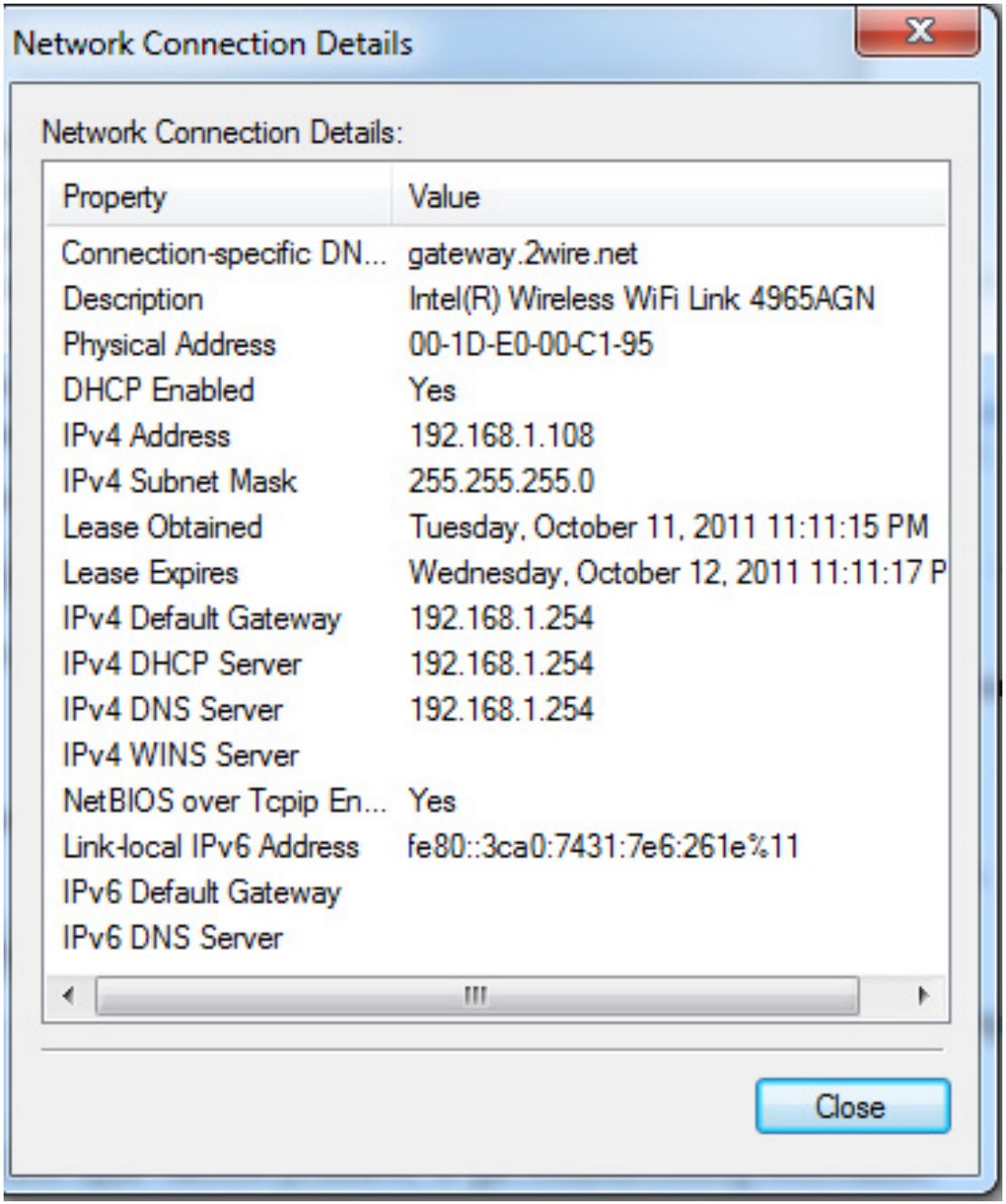

Network layer on a host knows:

1. Own IP address
2. Subnet mask
3. Gateway router IP
4. DNS server IP

Addresses, Subnet mask, Gateway

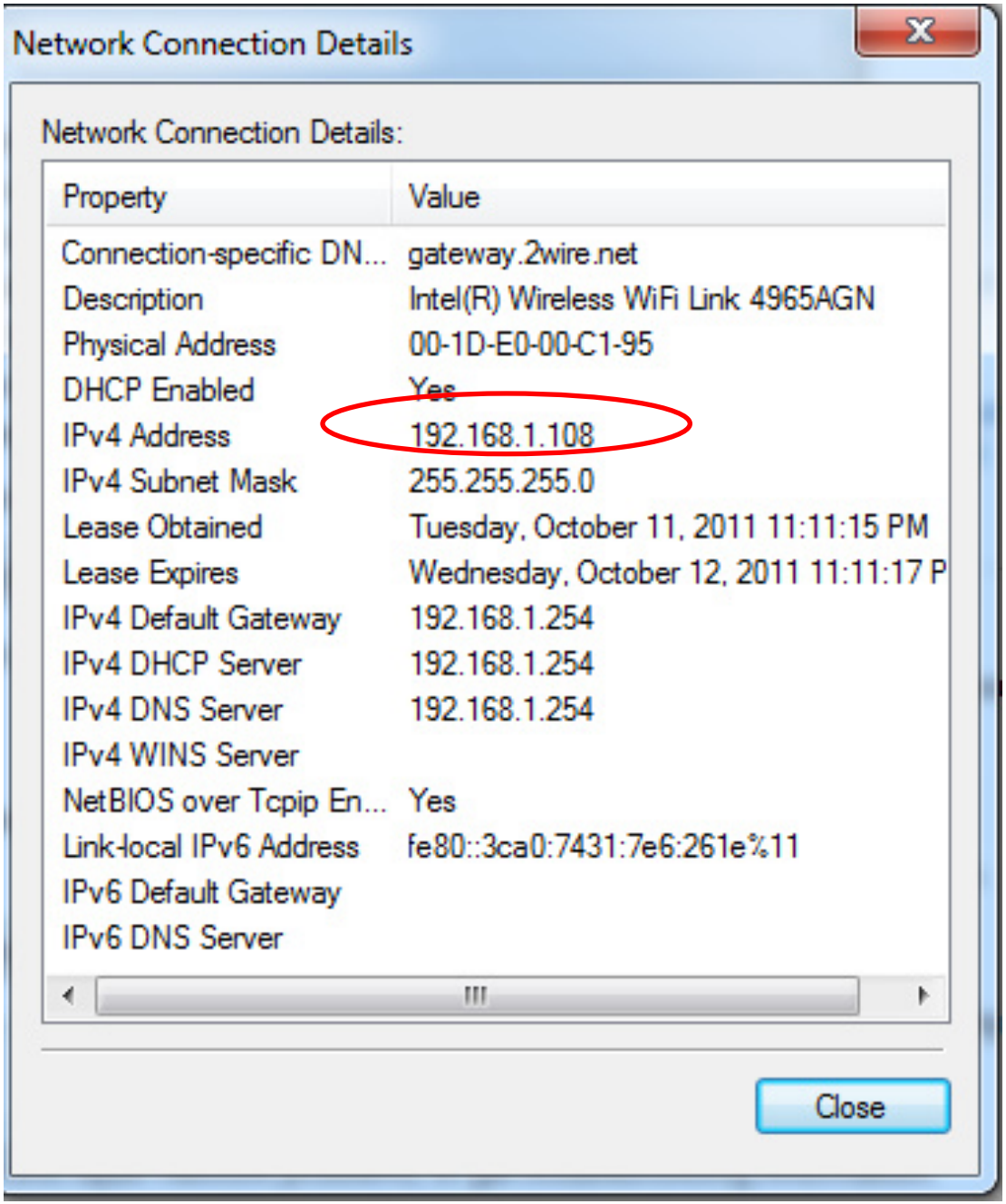

Network layer on a host knows:

1. Own IP address
2. Subnet mask
3. Gateway router IP
4. DNS server IP

Addresses, Subnet mask, Gateway

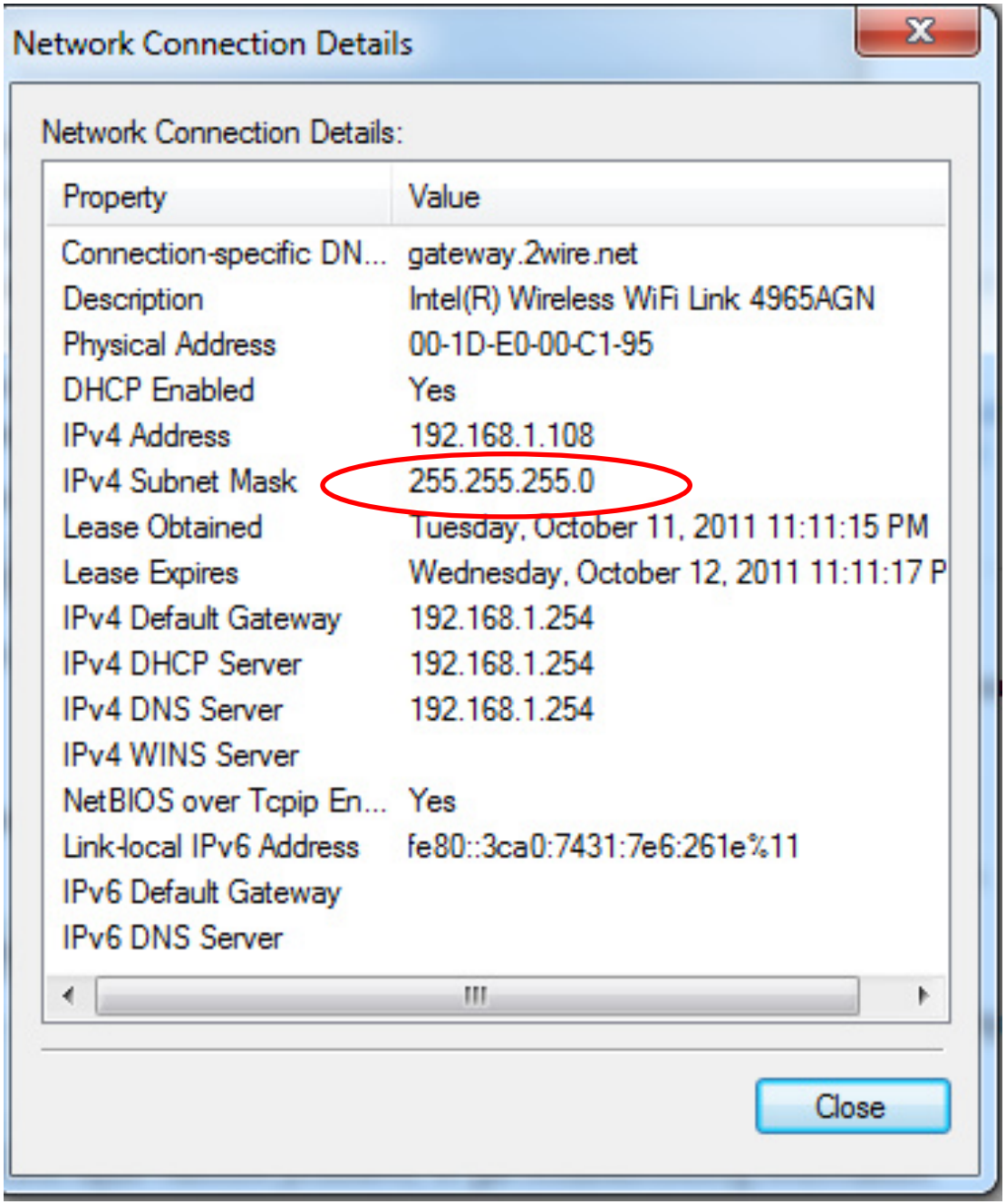

Network layer on a host knows:

1. Own IP address
2. Subnet mask
3. Gateway router IP
4. DNS server IP

Tells the host the range of IP addresses in the same Layer 2 subnet

Addresses, Subnet mask, Gateway

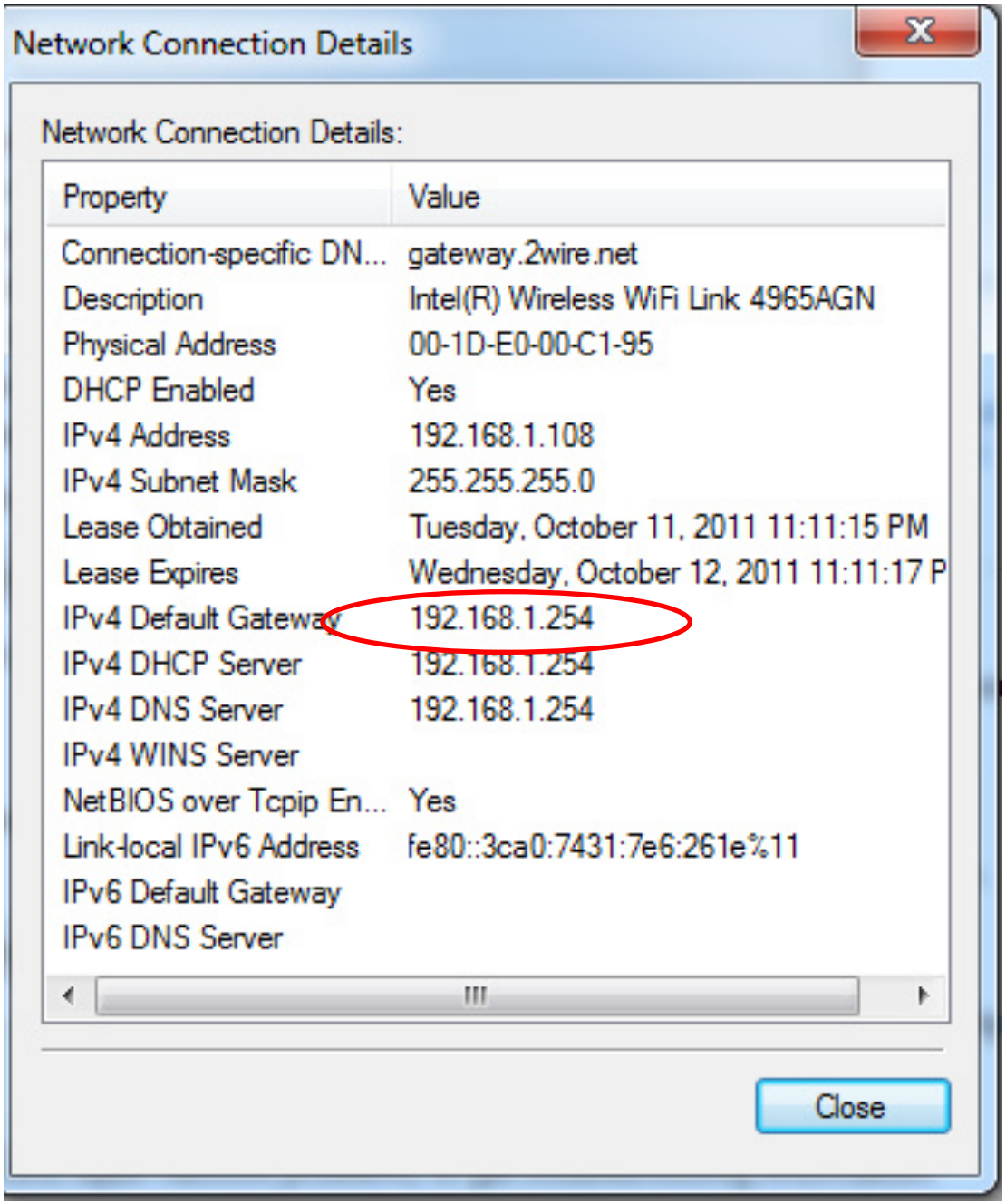

Network layer on a host knows:

1. Own IP address
2. Subnet mask
3. Gateway router IP
4. DNS server IP

Router (interface) that connects host to the rest of the internet

Addresses, Subnet mask, Gateway

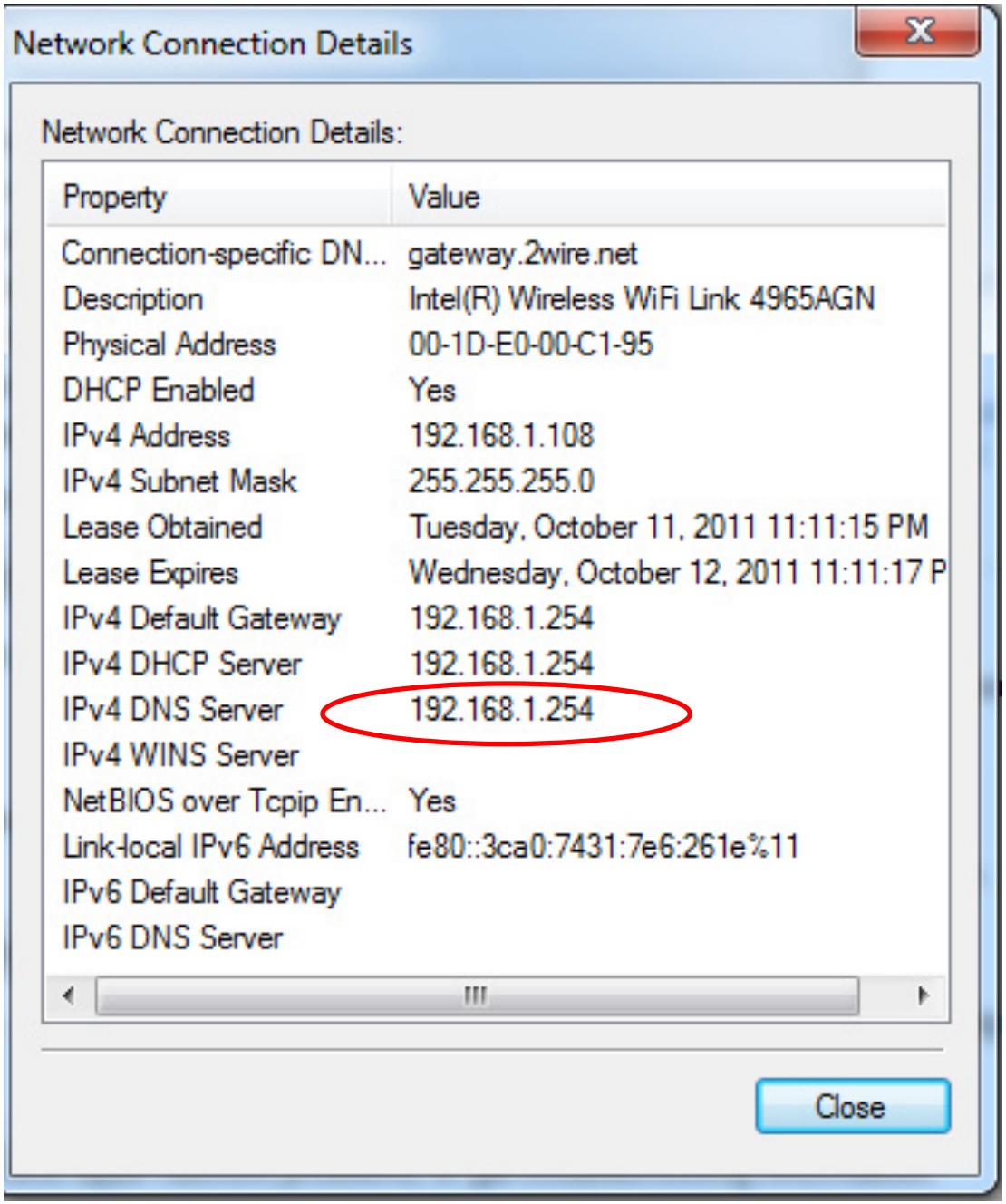

Network layer on a host knows:

1. Own IP address
2. Subnet mask
3. Gateway router IP
4. DNS server IP

This server returns IP addresses for a domain name

Example

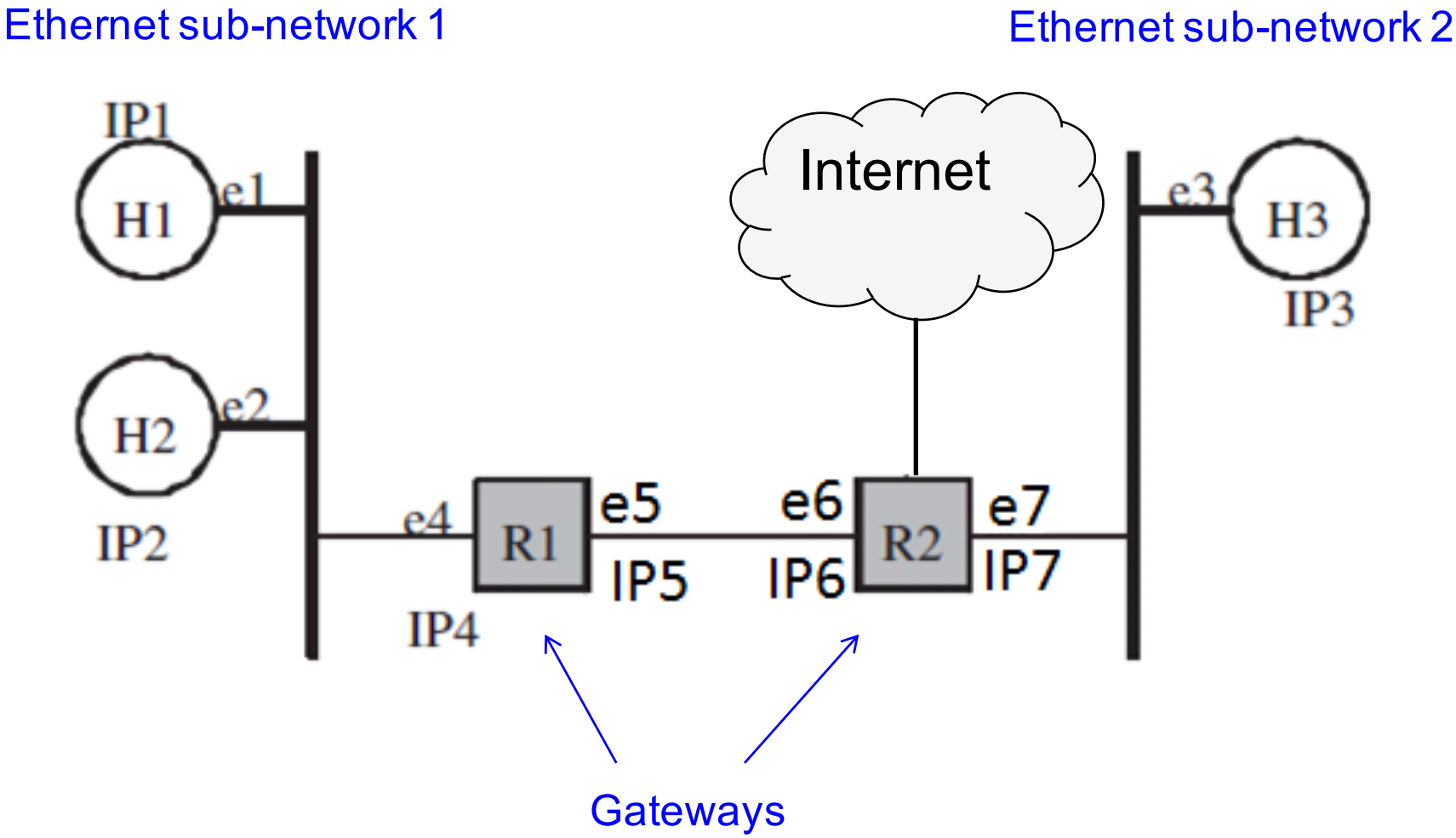
Ethernet sub-network 1
Ethernet sub-network 2
IP1
H1
e1
H2
e2
IP2
e4
IP4
R1
e5
IP5
e6
IP6
R2
e7
IP7
Internet
e3
H3
IP3
Gateways

Example: H1 wants to send packet to H2

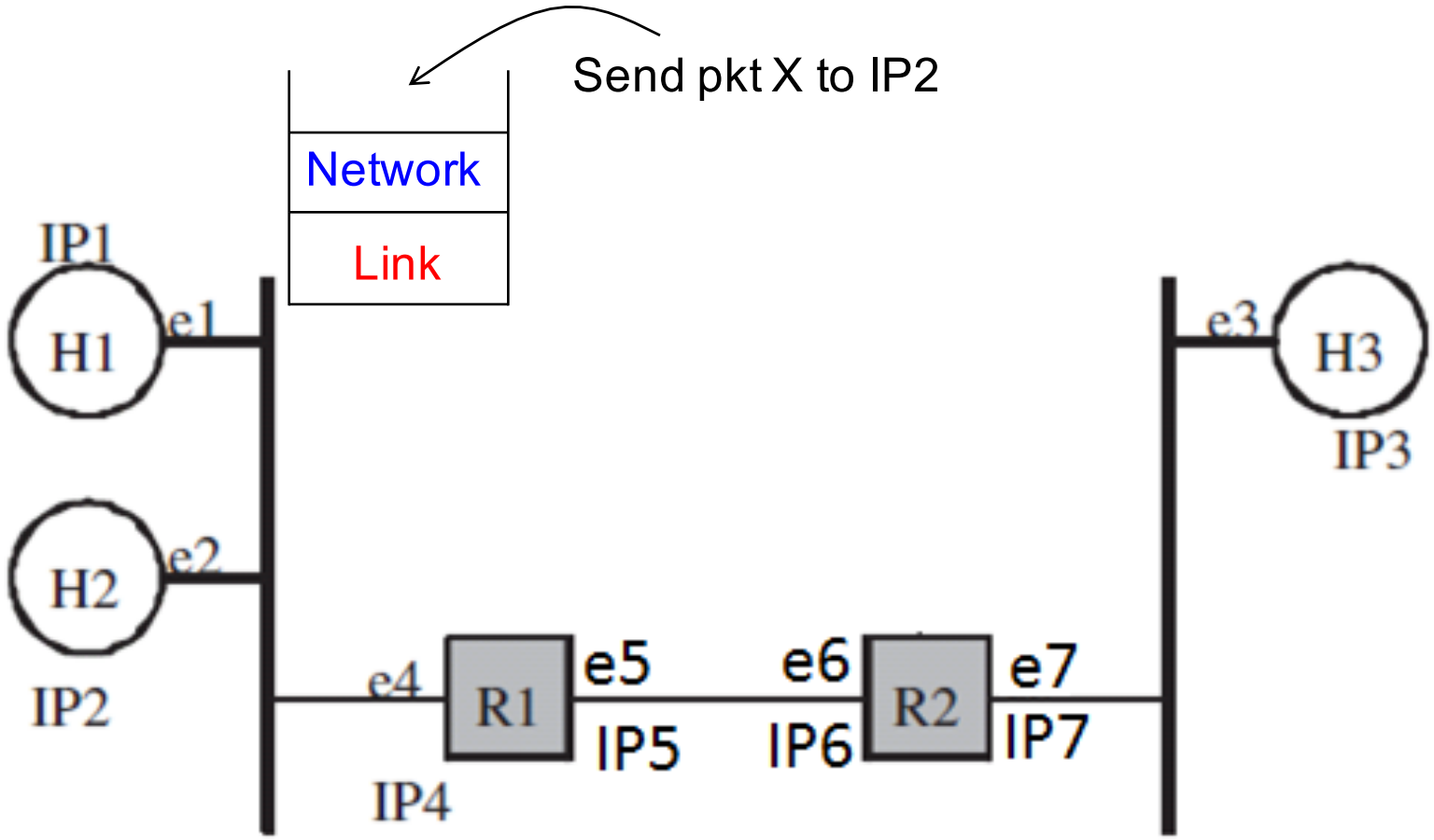

Network layer on H1 uses subset mask to determine that IP2 is within its subnet => next (layer 3) hop is IP2

Example: H1 wants to send packet to H2

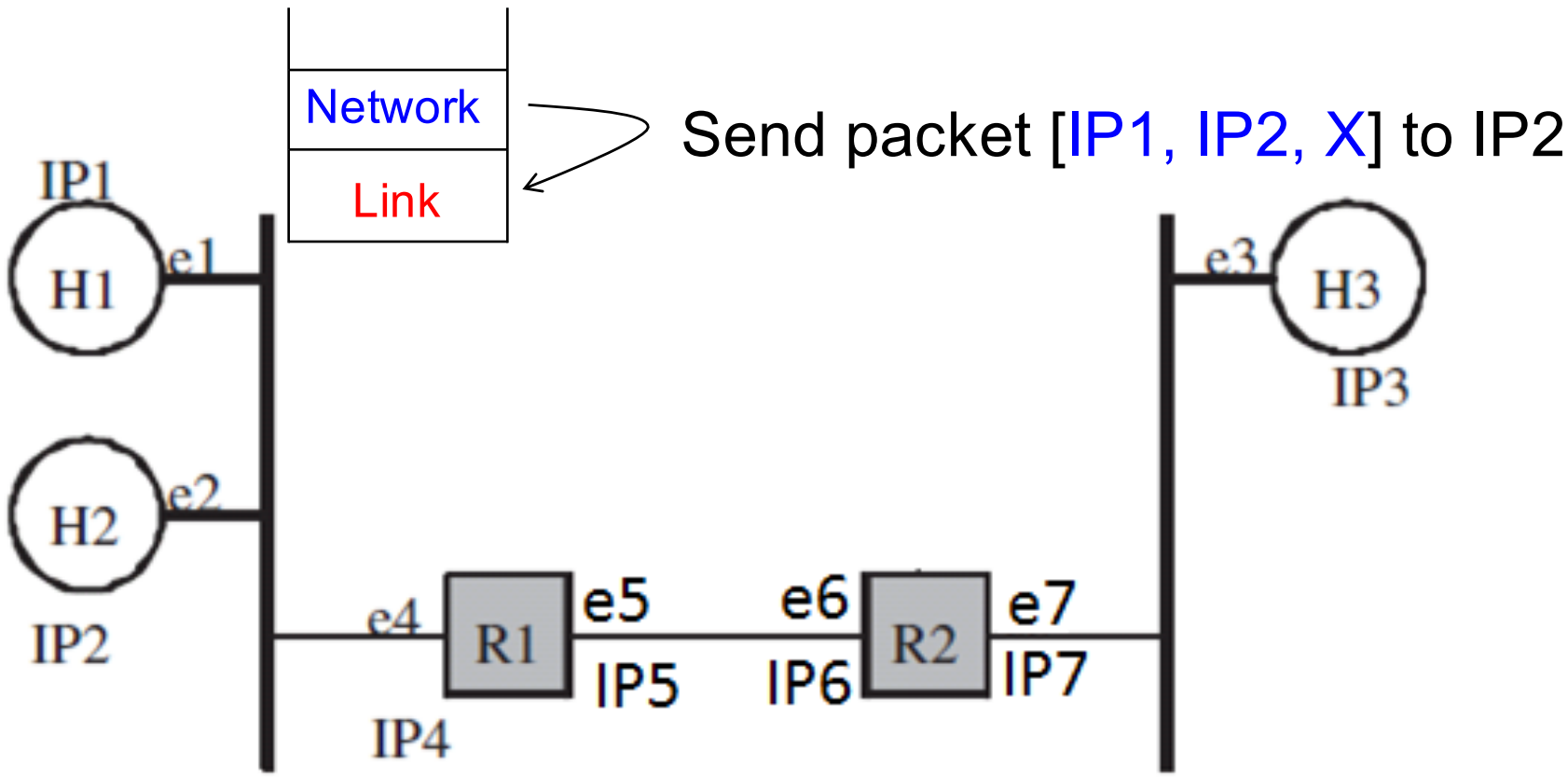

Link layer on H1 needs the MAC address e2 corresponding to IP2 to deliver the packet:

ARP (Address Resolution protocol)

Example: H1 wants to send packet to H2

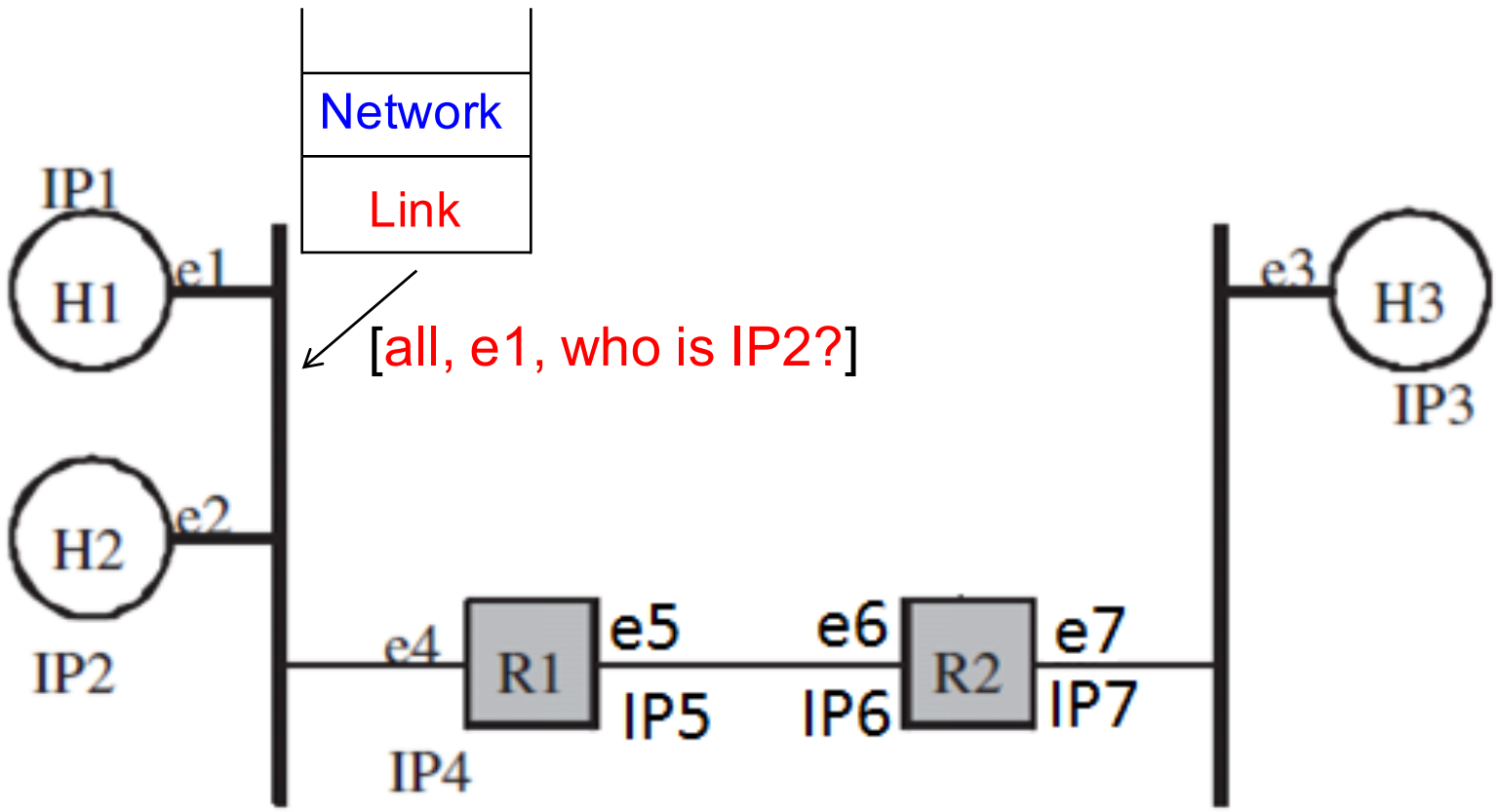

Link layer on H1 broadcasts a message (ARP query) on its layer 2 network asking for the MAC address corresponding to IP2

Example: H1 wants to send packet to H2

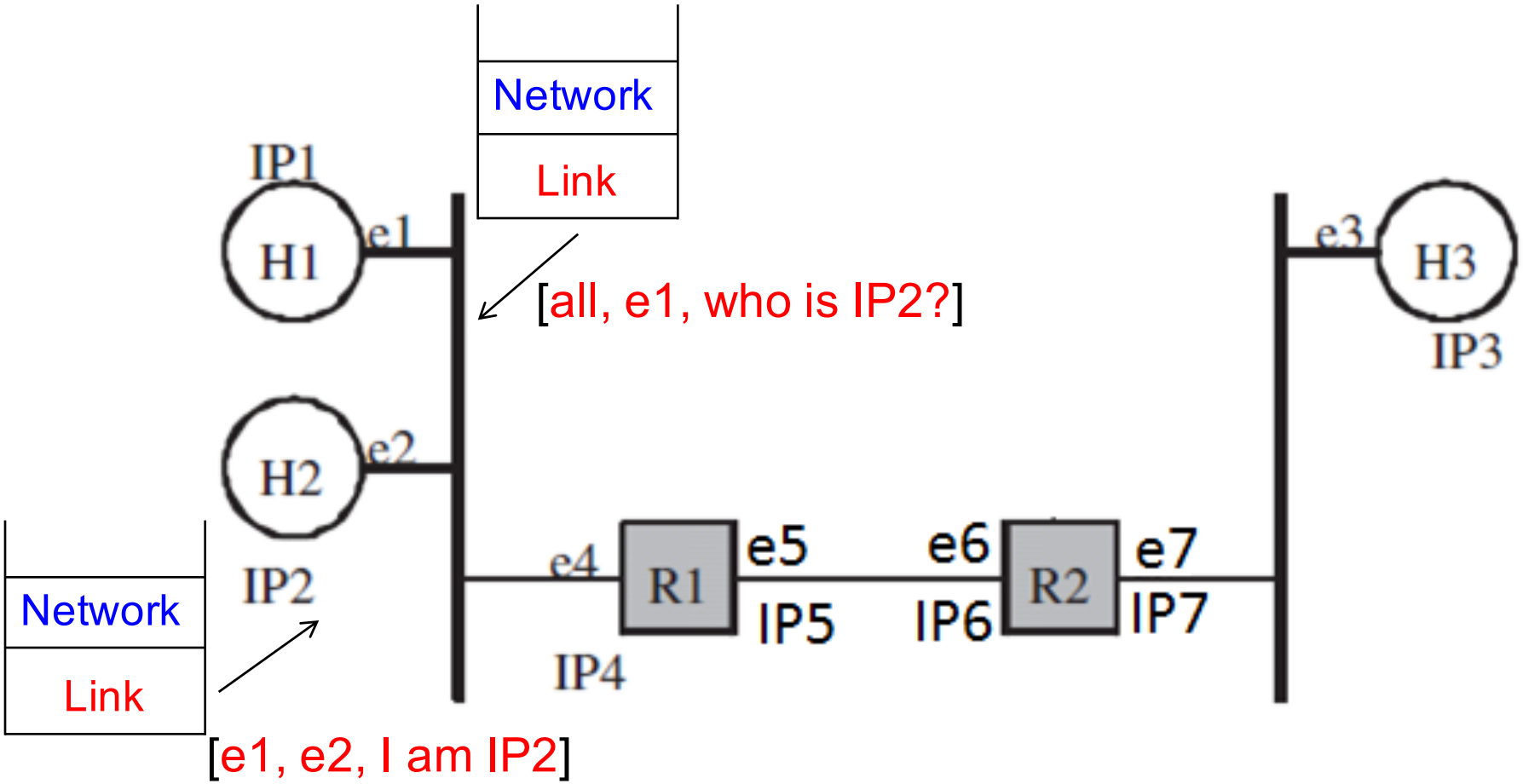

Link layer on H2 responds to the ARP query with its MAC address

Example: H1 wants to send packet to H2

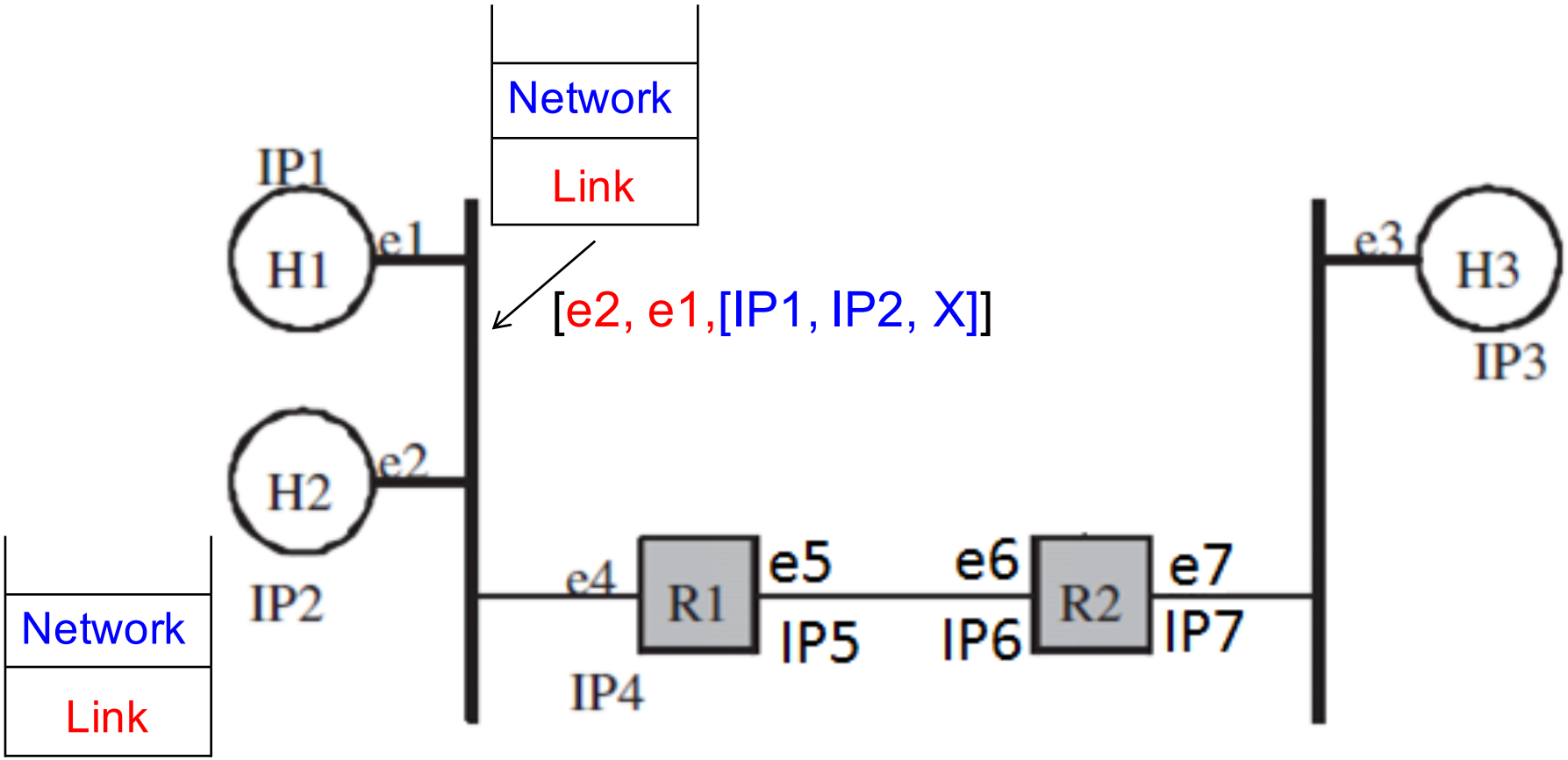

Once the link layer on H1 knows e2, it can now send the original message

Example: H1 wants to send packet to H2

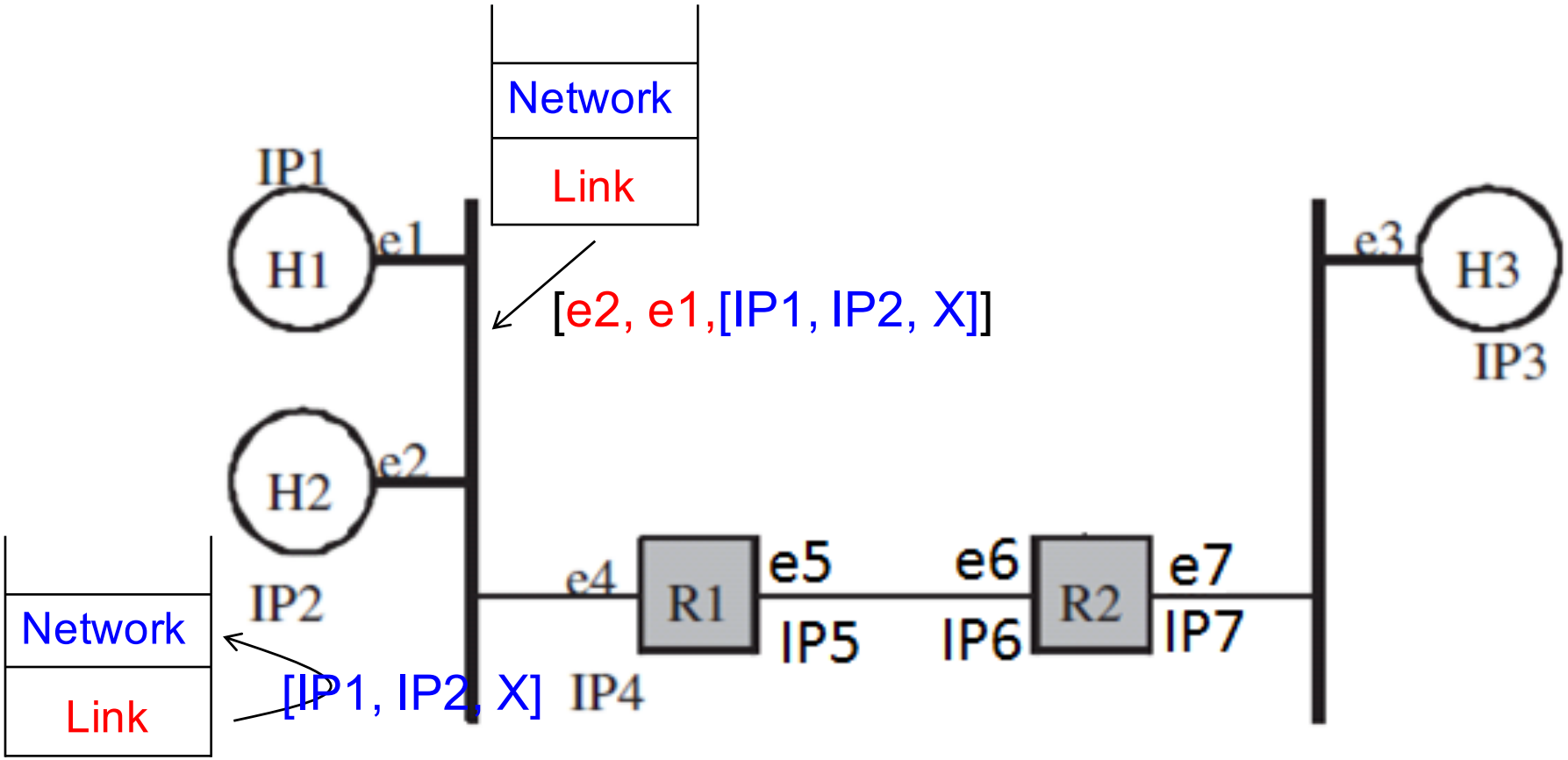

[e2, e1,[IP1, IP2, X]]

Link layer on H2 delivers the packet to the network layer on H2

Example: H1 wants to send packet to H3

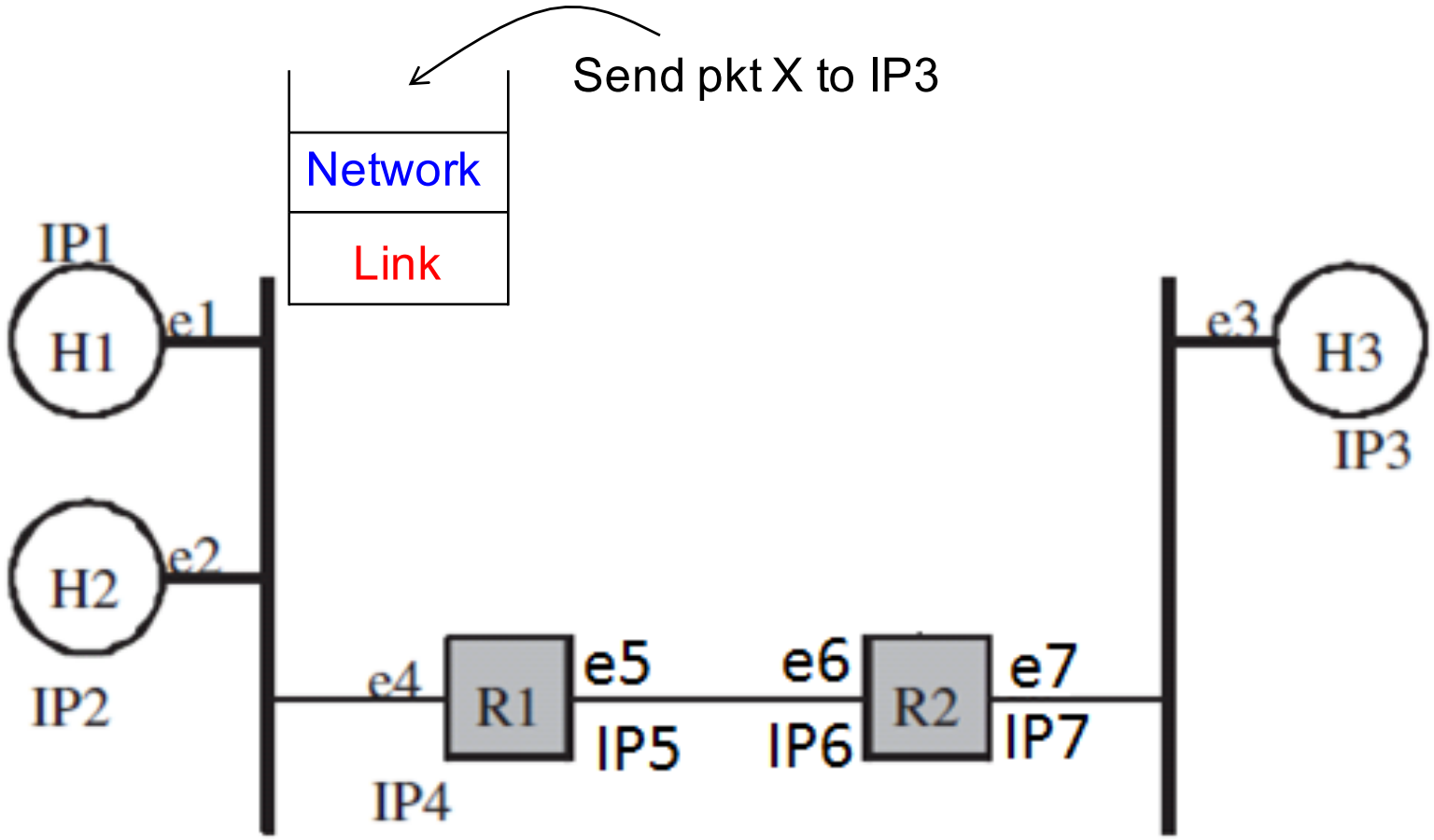

Example: H1 wants to send packet to H3

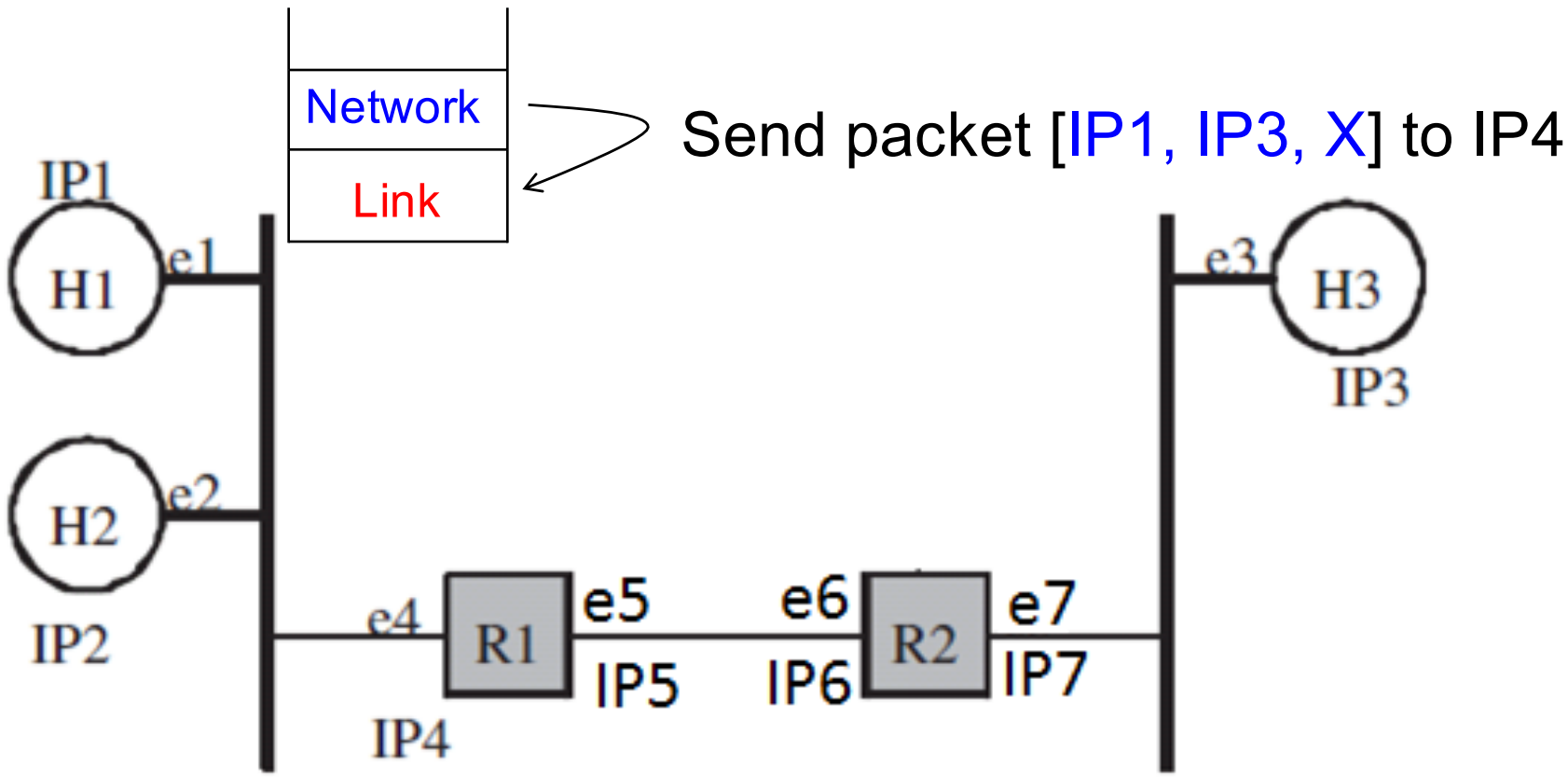

Network layer on H1 checks that IP3 is not in its subnet, so it routes it to its gateway IP4

Example: H1 wants to send packet to H3

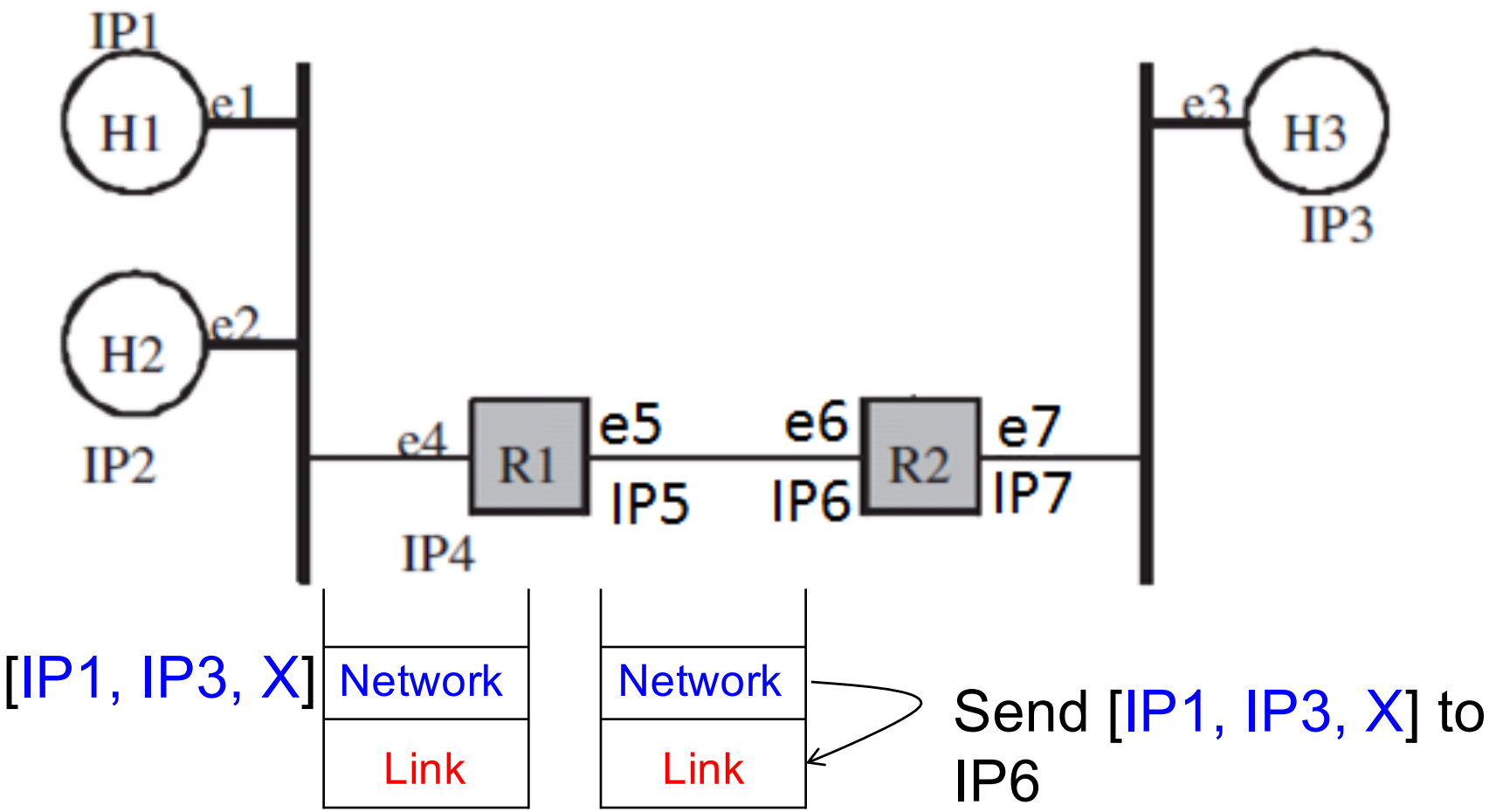

Example: H1 wants to send packet to H3

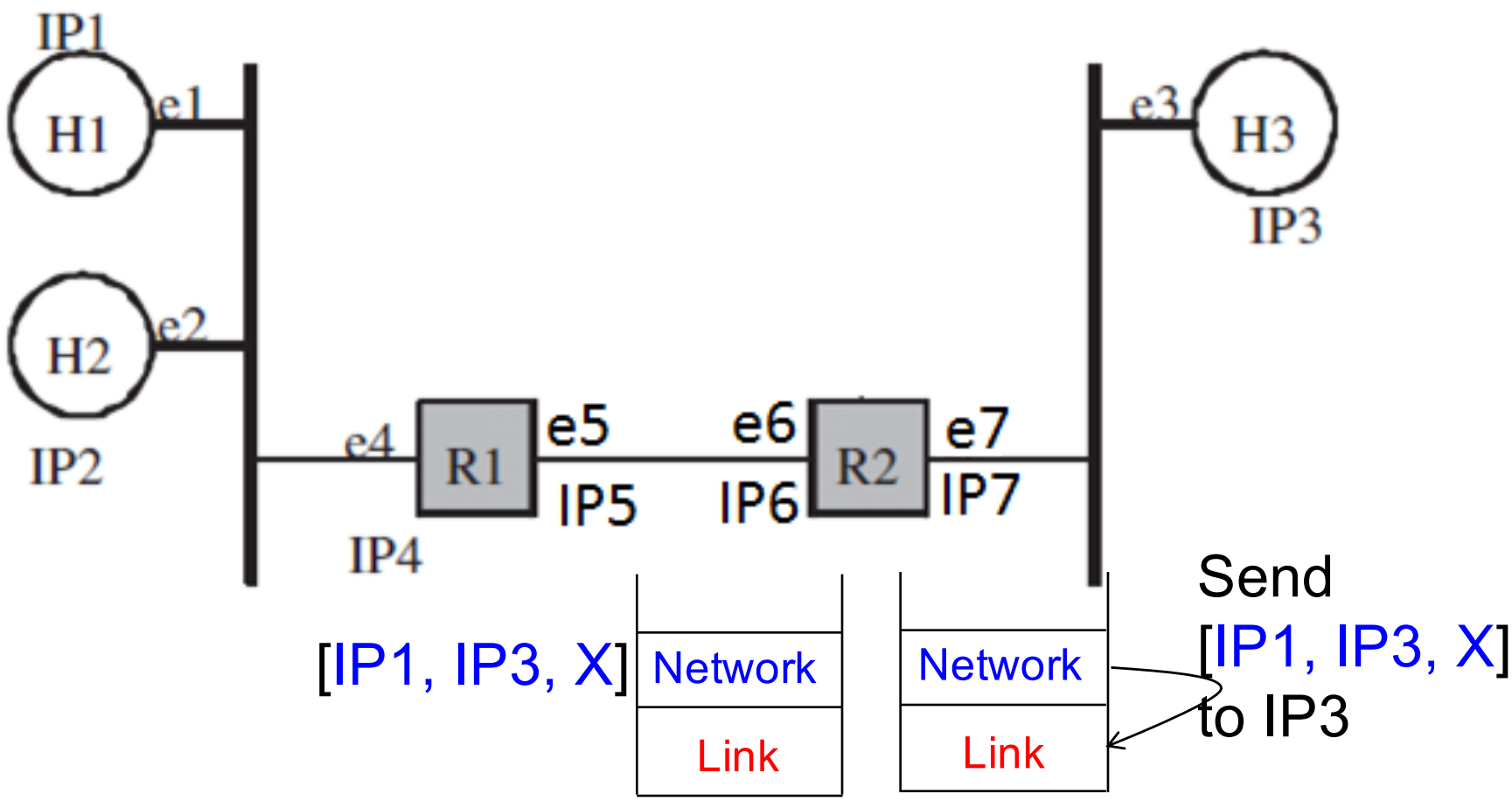

Summary

- Network layer (Layer 3)
  - Provides host-to-host communication service by finding a path of routers connecting any two hosts
  - Main function: routing

- Link layer (Layer 2)
  - Provides host-router and router-router communication by utilizing the physical communication links

    => provides a service to the network layer

Putting it all together

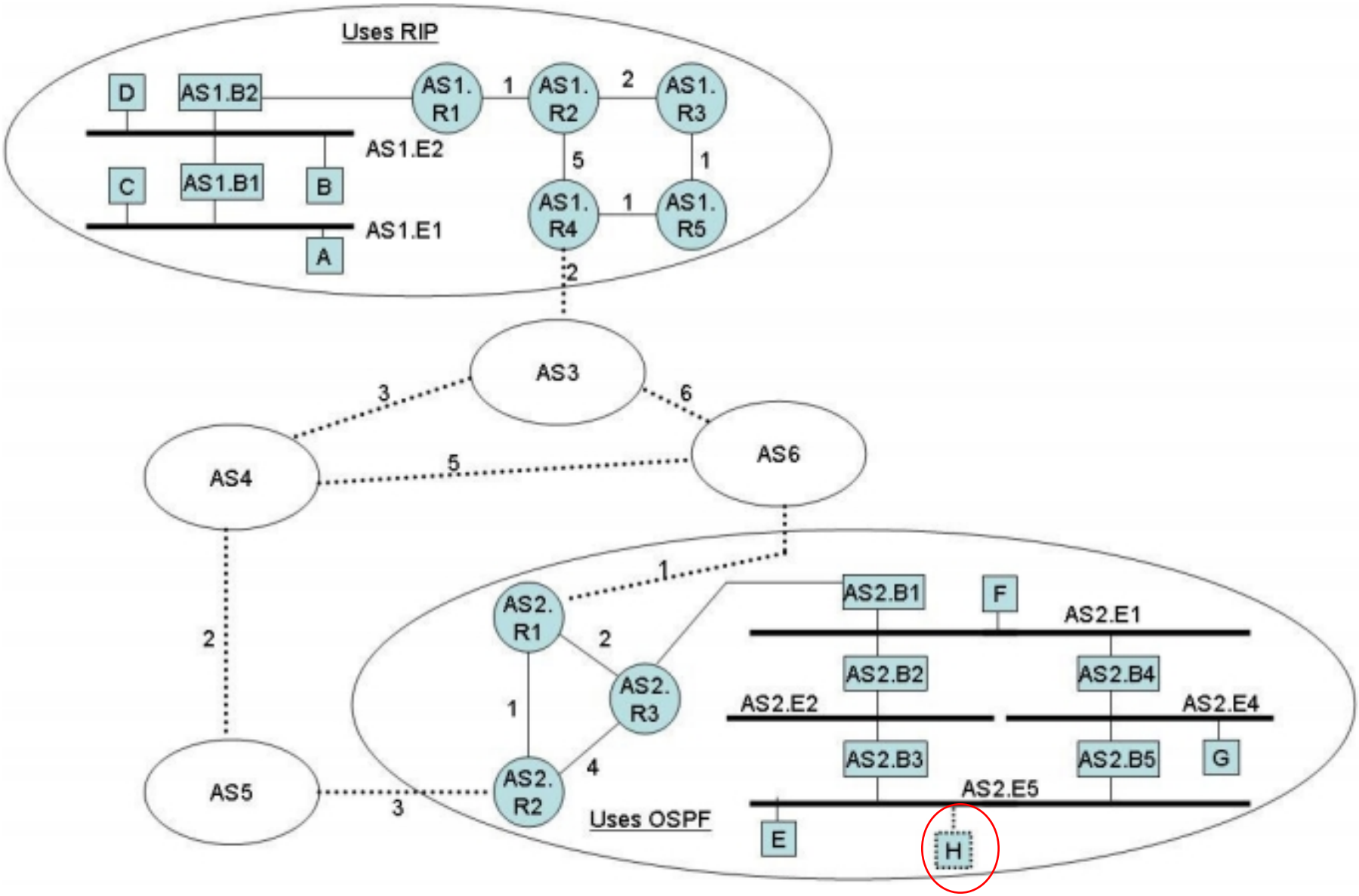

initially unconnected

Figure 5.19: Figure for Routing Problem 3. [W&P 2010]

Putting it all together

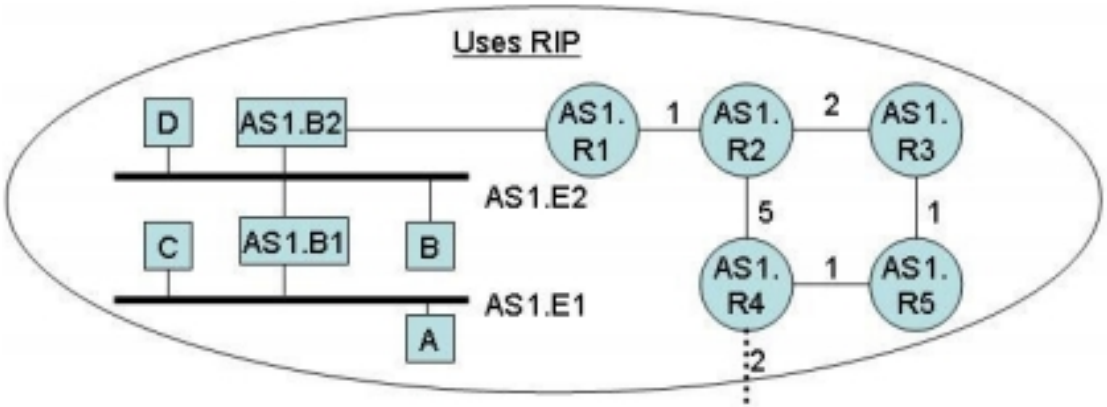

- The network addresses of nodes are given by <AS>.<Network>.0.<node>, e.g., node A has the address AS1.E1.0.A,
- The bridge IDs satisfy B1 < B2 < B3 …,
- H is not connected to AS2.E5 for part (a),
- The BGP Speakers use the least-next-hop-cost policy for routing (i.e., among alternative paths to the destination AS, choose the one that has the least cost on the first hop), and
- The network topology shown has been stable for a long enough time to allow all the routing algorithms to converge and all the bridges to learn where to forward each packet.

Figure 5.19: Figure for Routing Problem 3. [W&P 2010]

Putting it all together

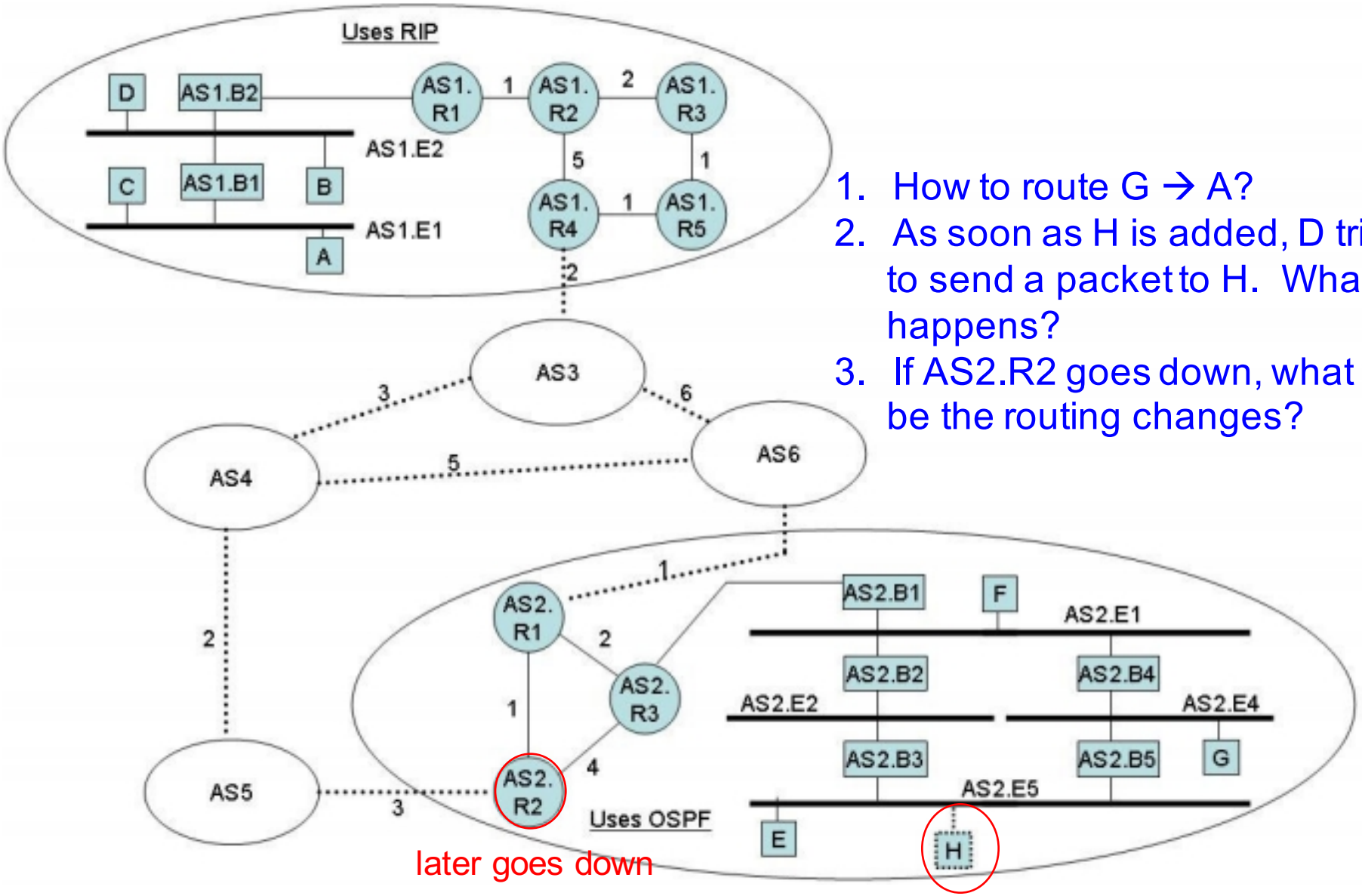

1. How to route G → A?
2. As soon as H is added, D tries to send a packet to H. What happens?
3. If AS2.R2 goes down, what will be the routing changes?

Figure 5.19: Figure for Routing Problem 3. [W&P 2010]

1. compute spanning tree

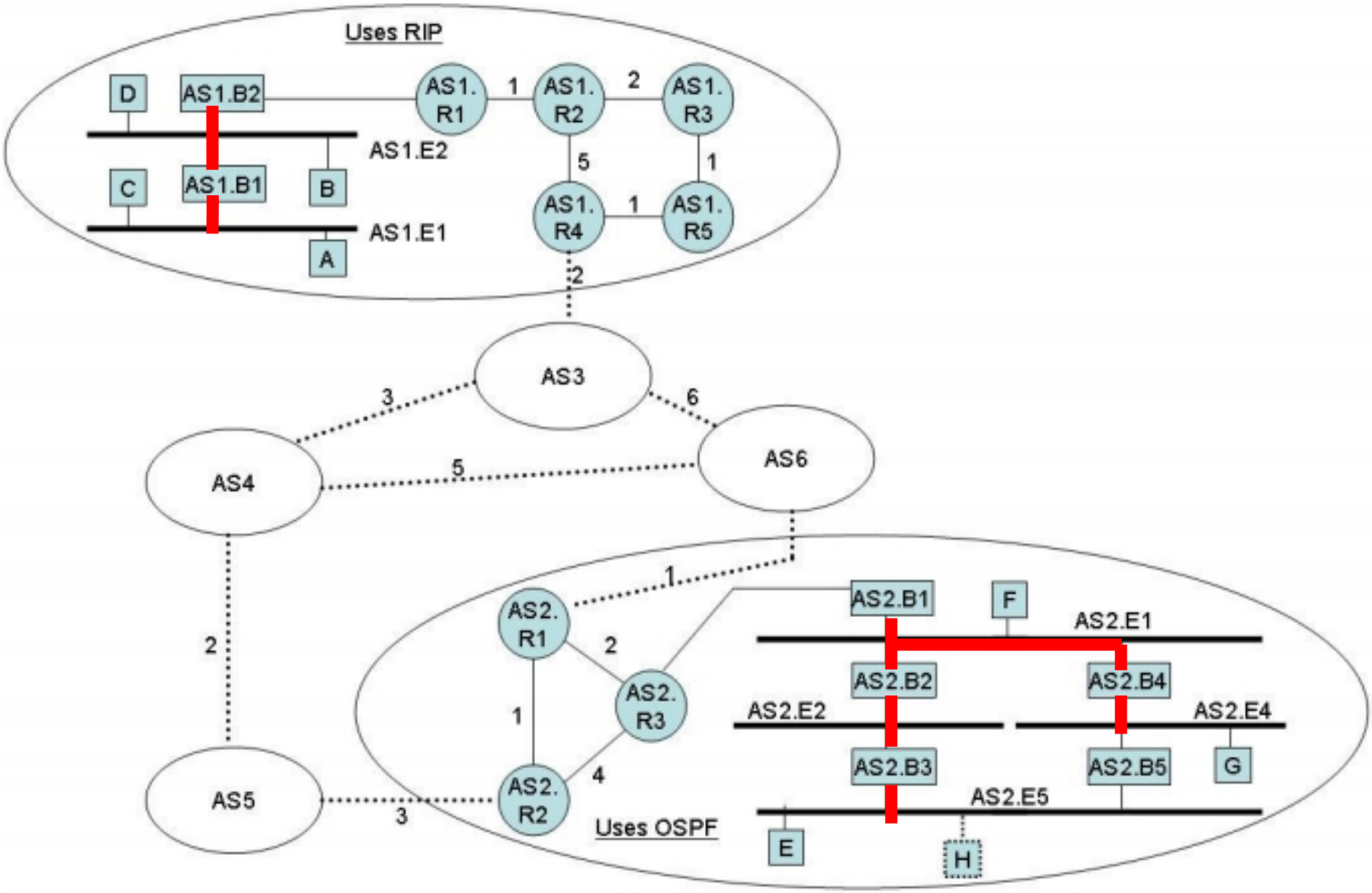

Figure 5.19: Figure for Routing Problem 3. [W&P 2010]

Recap: STP routing on subnet

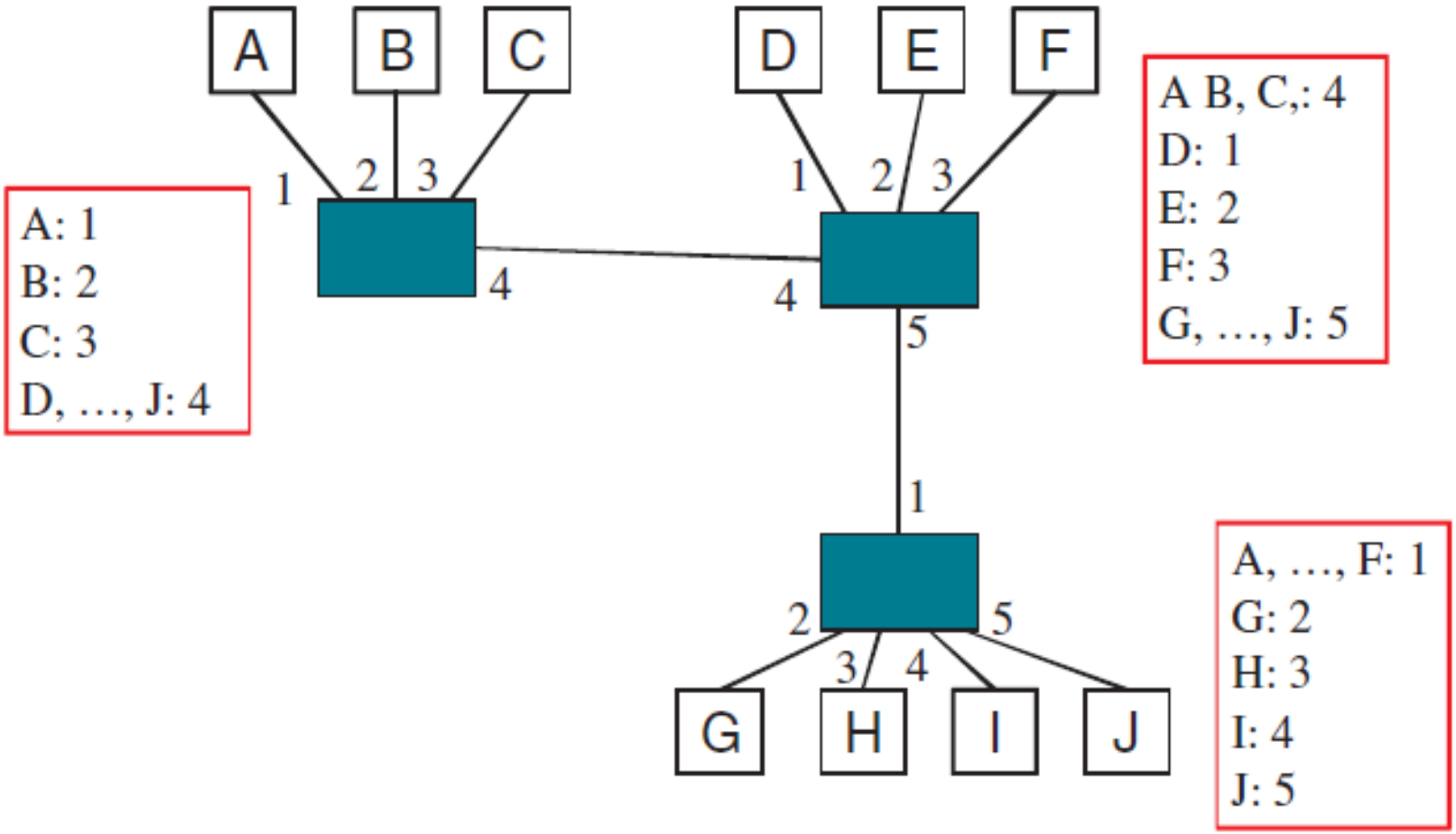

x → y: [y | x | data]

2. compute intra-AS routing

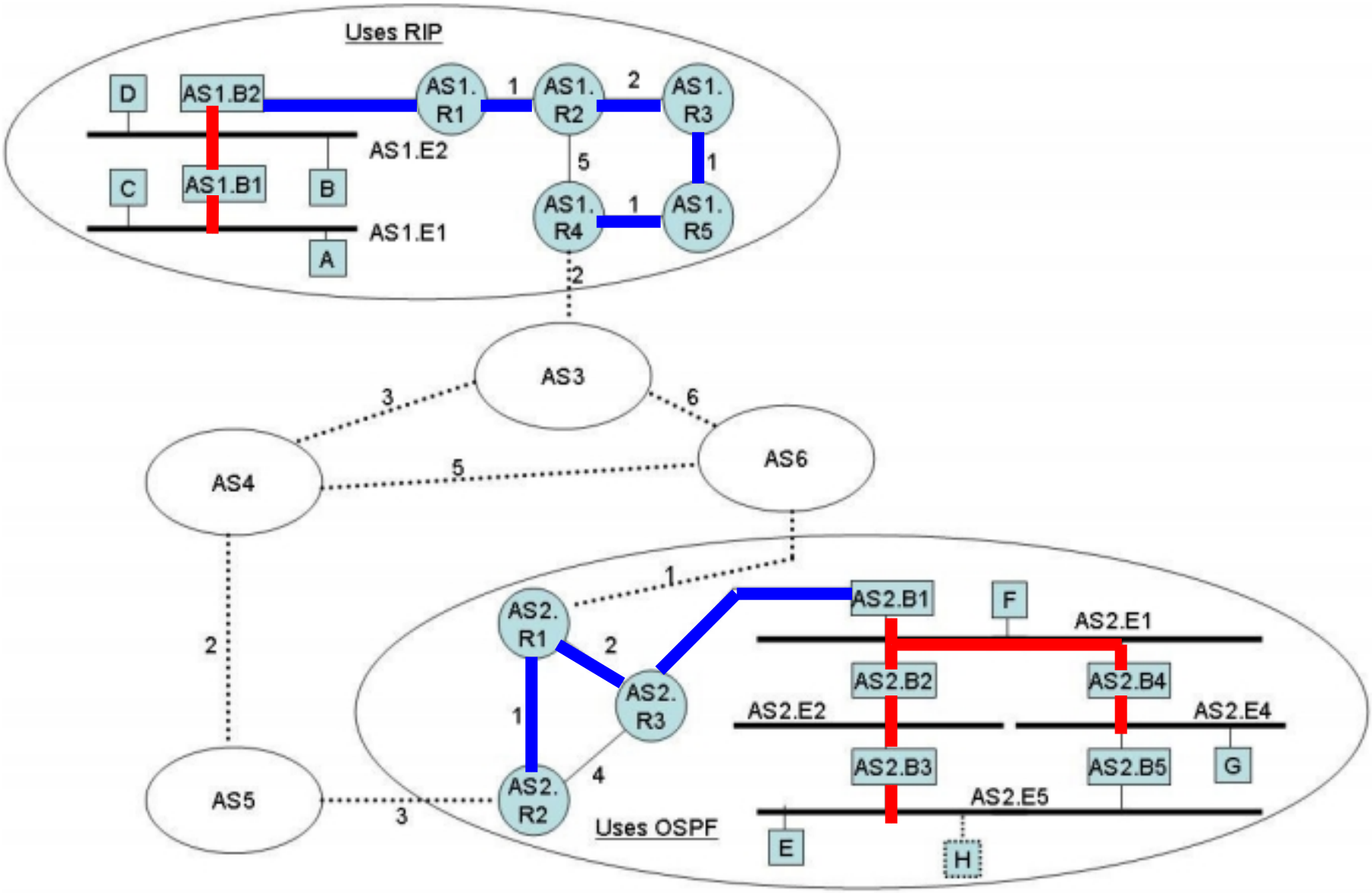

Figure 5.19: Figure for Routing Problem 3. [W&P 2010]

Recap: intra-AS routing

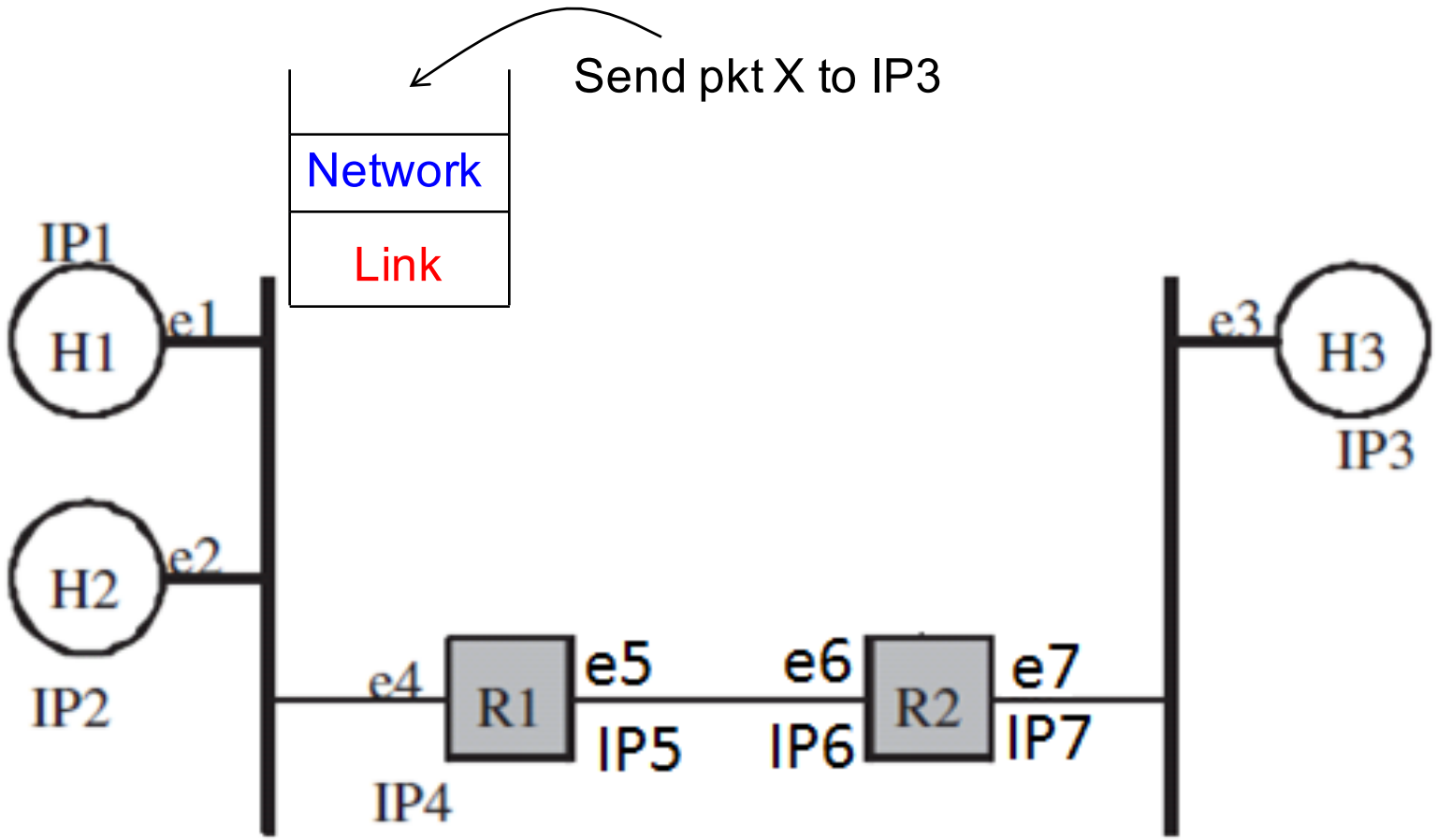

3. compute inter-AS routing

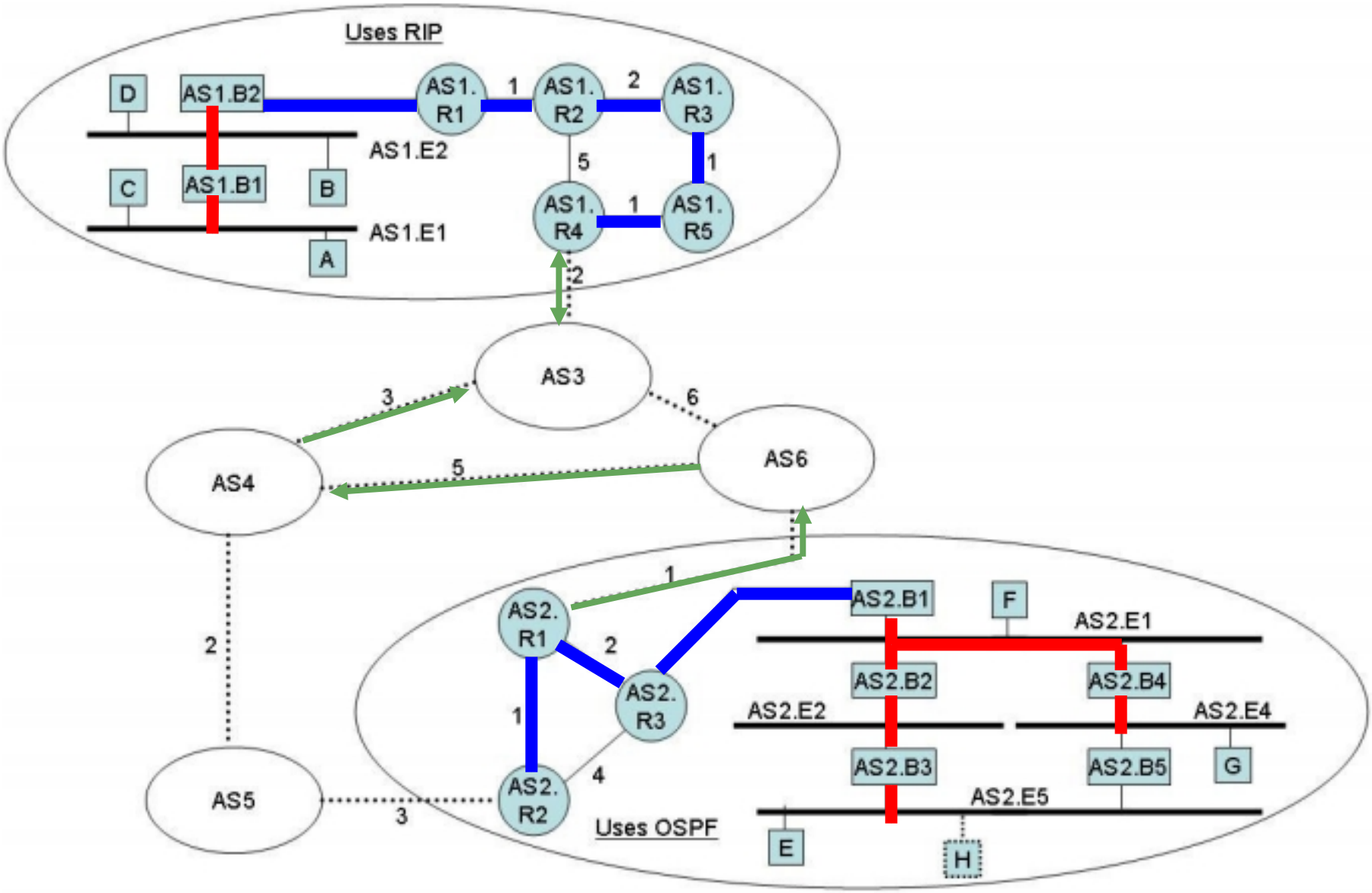

Figure 5.19: Figure for Routing Problem 3. [W&P 2010]

Recap: inter-AS routing

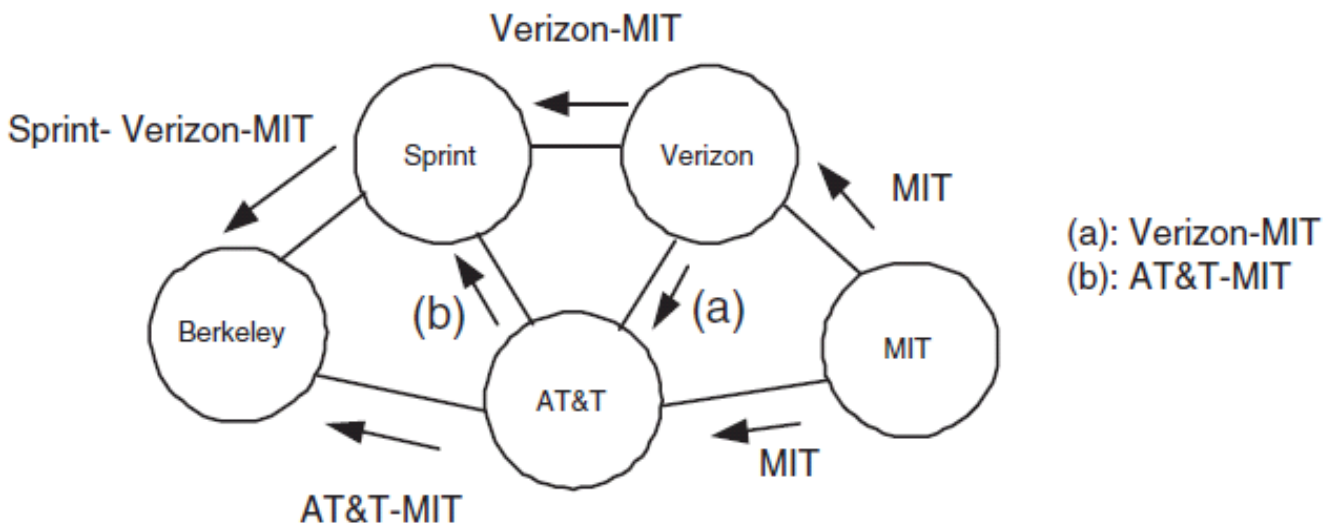

<u>Example</u>

BGP policy at Berkeley:

1. If possible, avoid AT&T
2. Choose path with smallest #hops
3. Alphabetical

Berkeley decision:

use path Sprint-Verizon-MIT to reach MIT

3. compute inter-AS routing

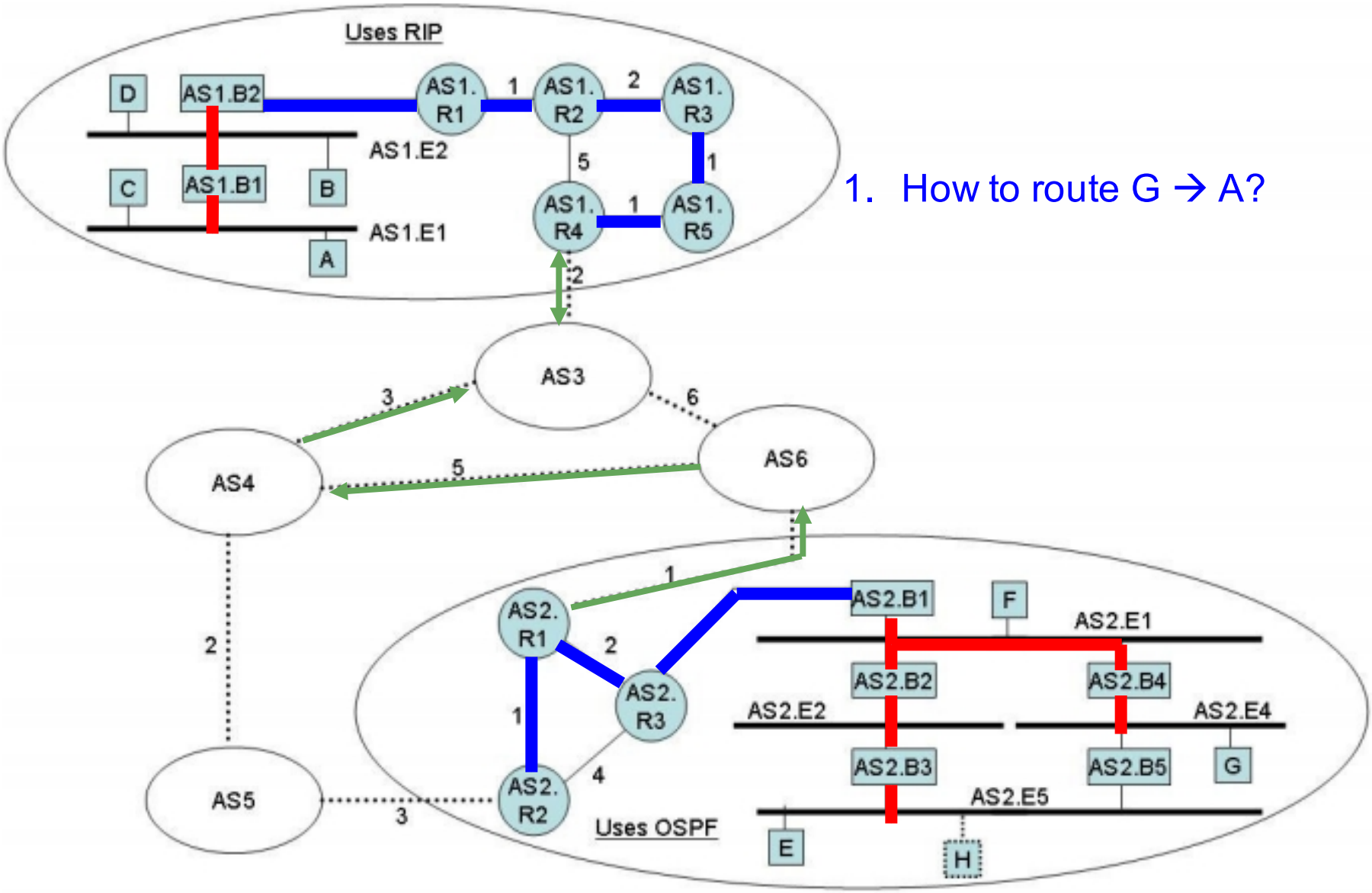

1. How to route G → A?

Figure 5.19: Figure for Routing Problem 3. [W&P 2010]

3. compute inter-AS routing

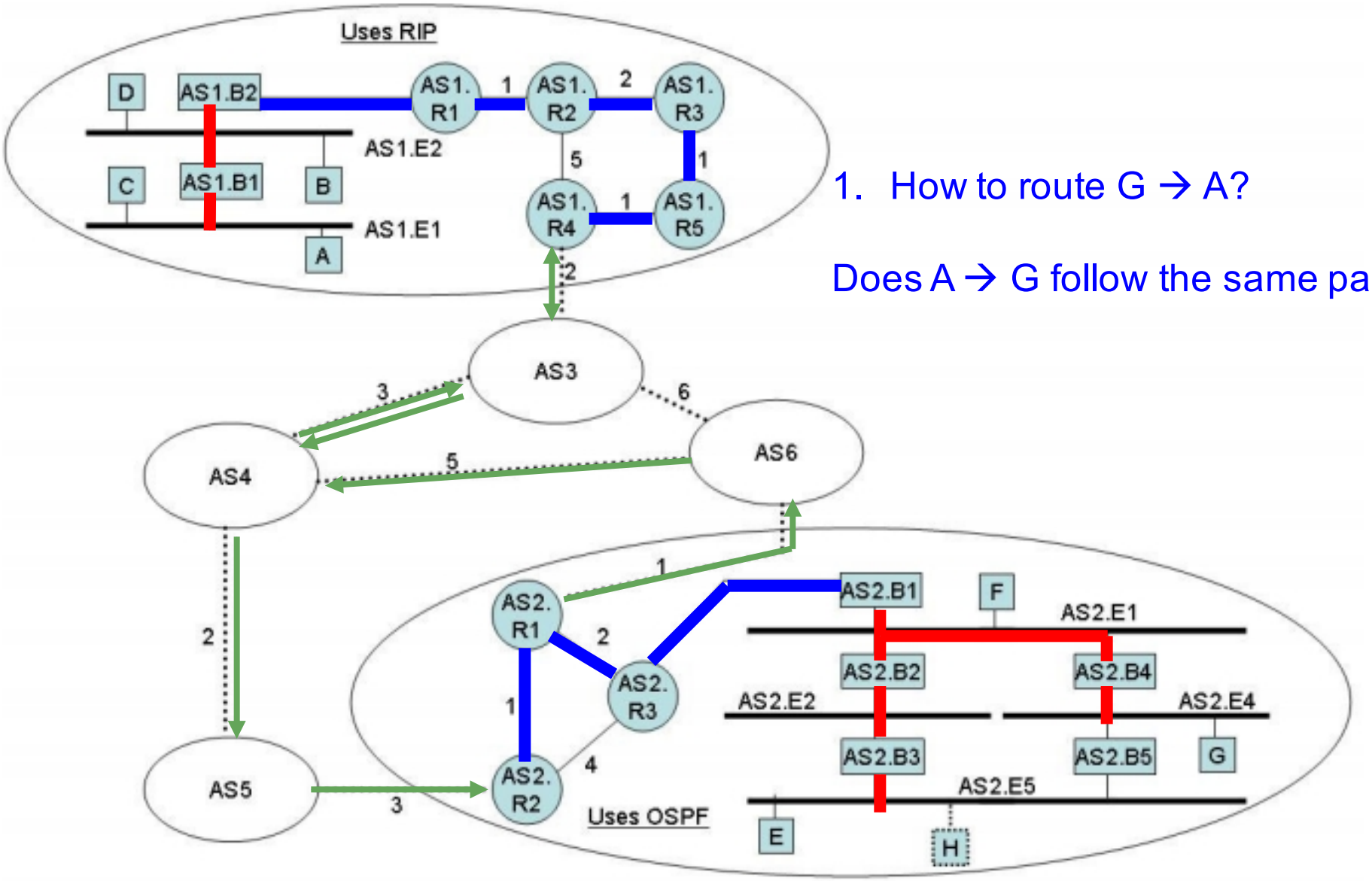

1. How to route G → A?

Does A → G follow the same path?

Figure 5.19: Figure for Routing Problem 3. [W&P 2010]

4. Address resolution protocol

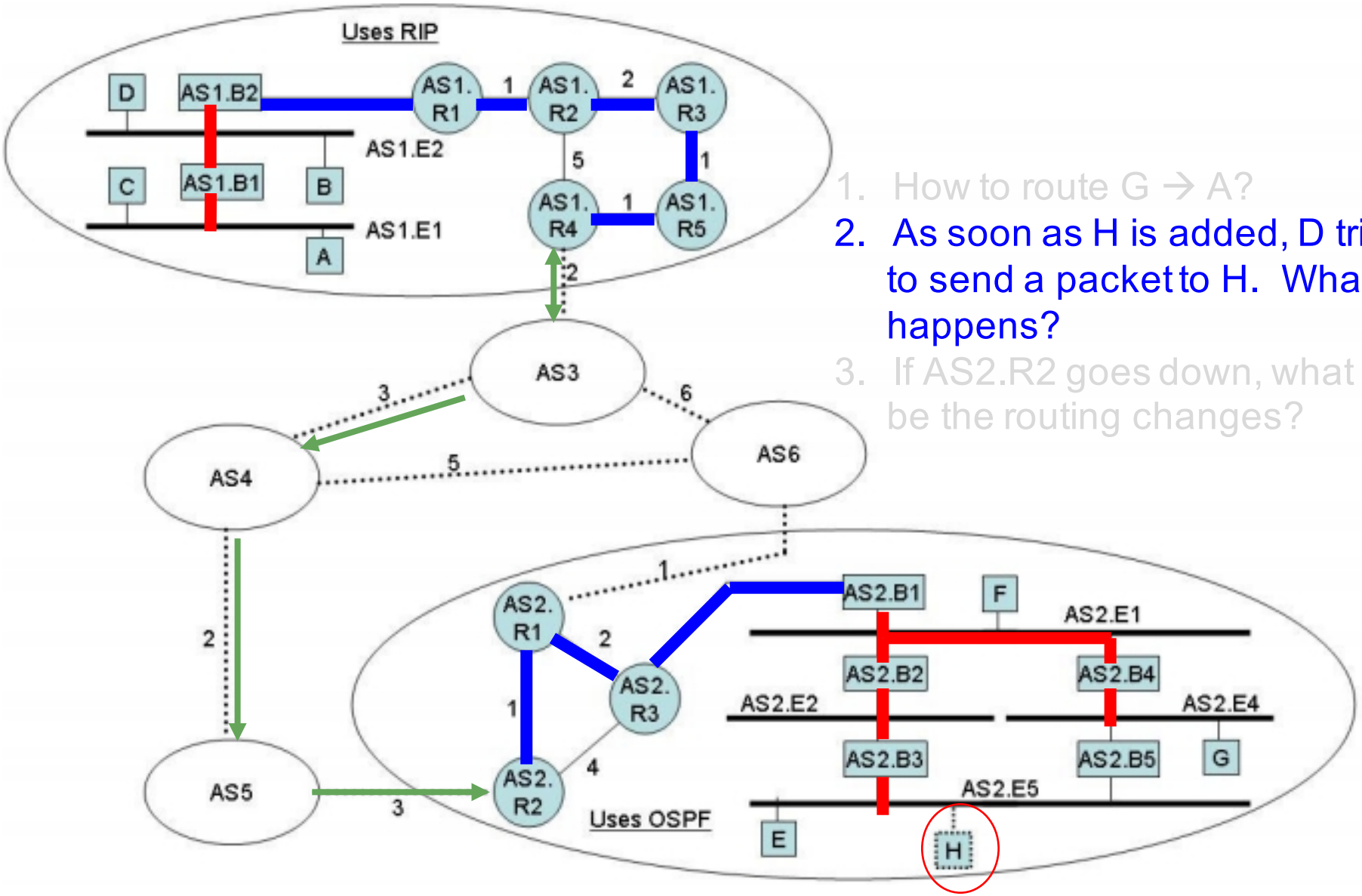

1. How to route G → A?
2. As soon as H is added, D tries to send a packet to H. What happens?
3. If AS2.R2 goes down, what will be the routing changes?

Figure 5.19: Figure for Routing Problem 3. [W&P 2010]

4. Address resolution protocol

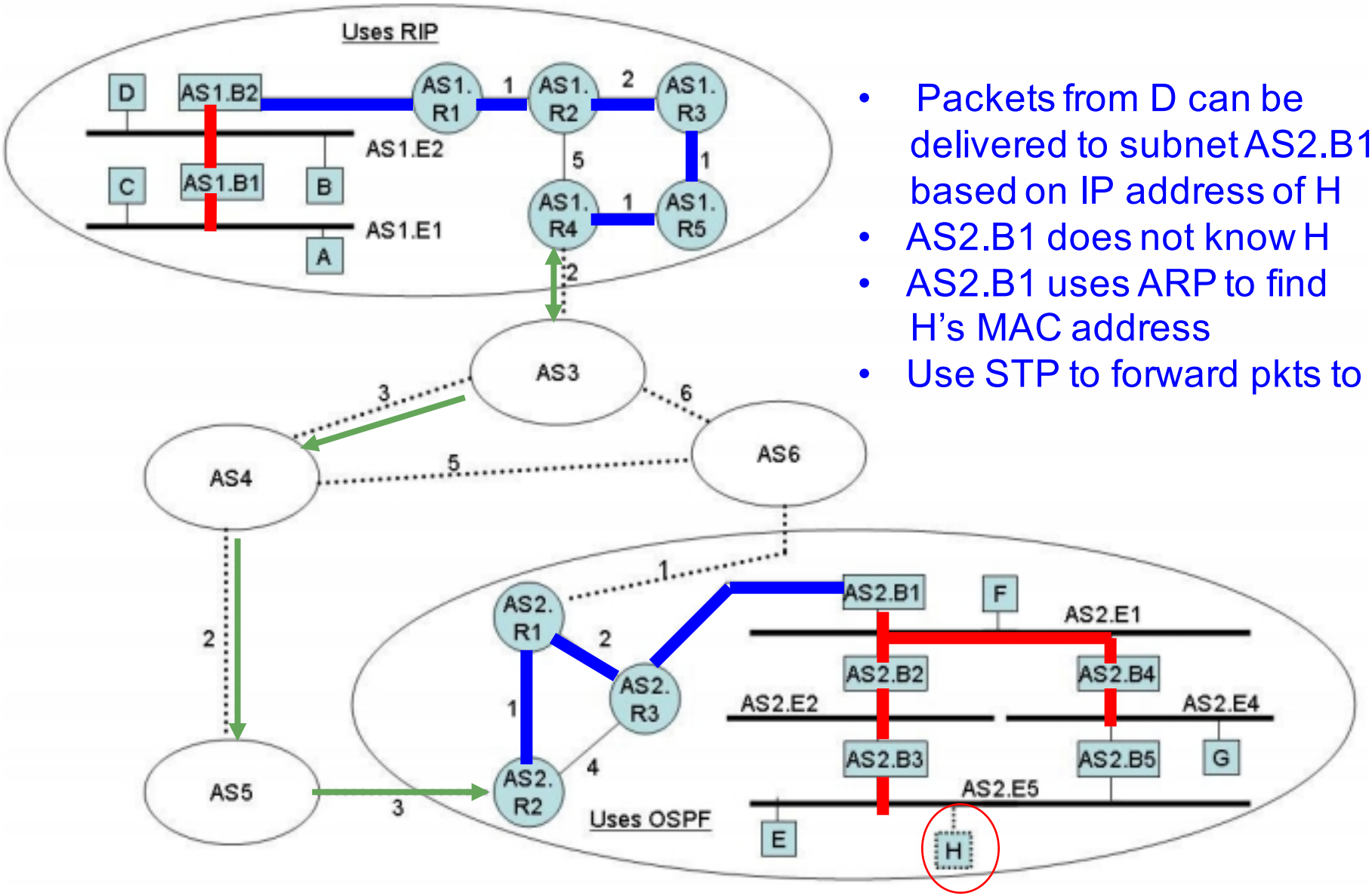

- Packets from D can be delivered to subnet AS2.B1 based on IP address of H
- AS2.B1 does not know H
- AS2.B1 uses ARP to find H's MAC address
- Use STP to forward pkts to H

Figure 5.19: Figure for Routing Problem 3. [W&P 2010]

Example: H1 wants to send packet to H2

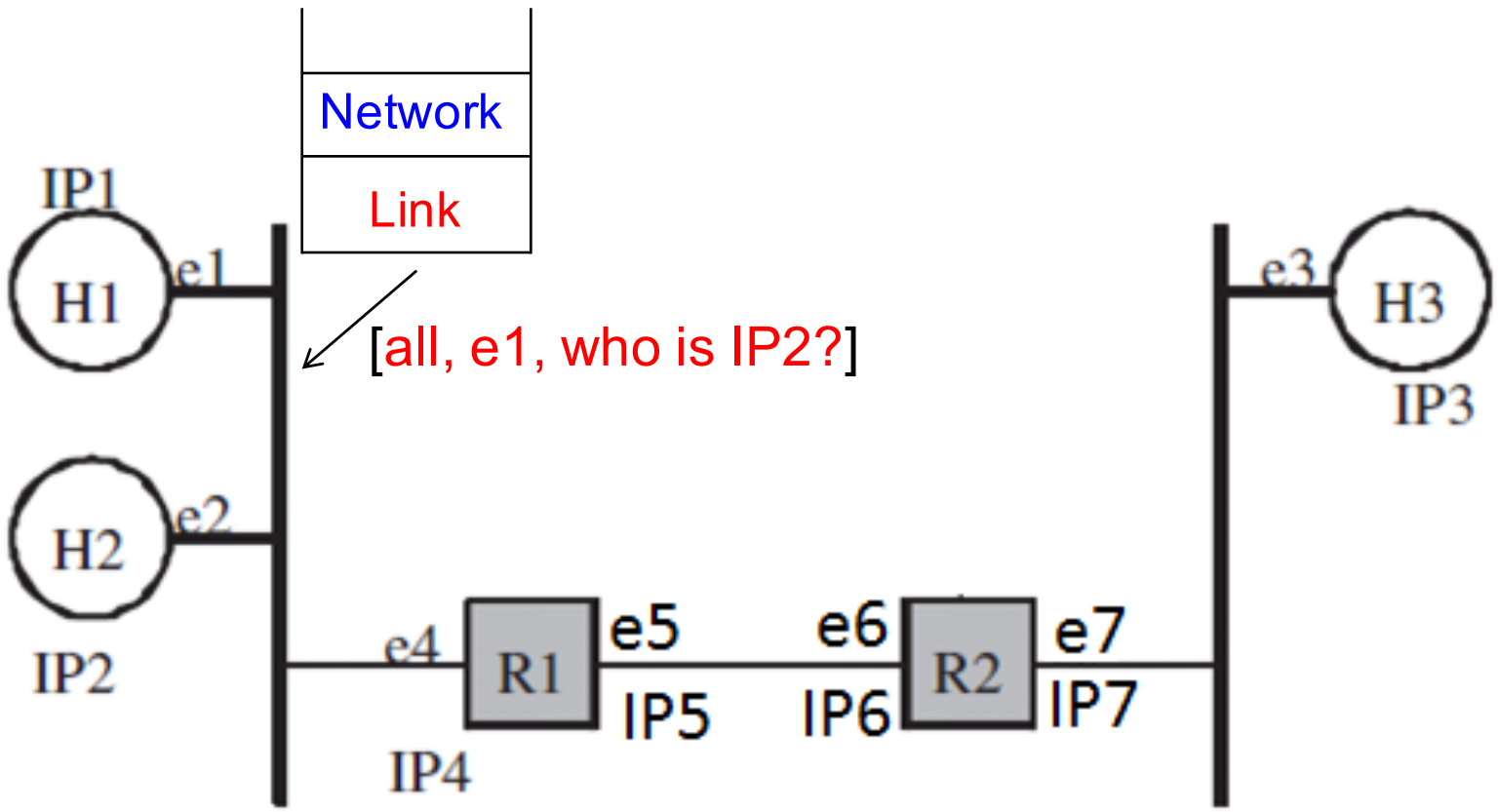

Link layer on H1 broadcasts a message (ARP query) on its layer 2 network asking for the MAC address corresponding to IP2

Example: H1 wants to send packet to H2

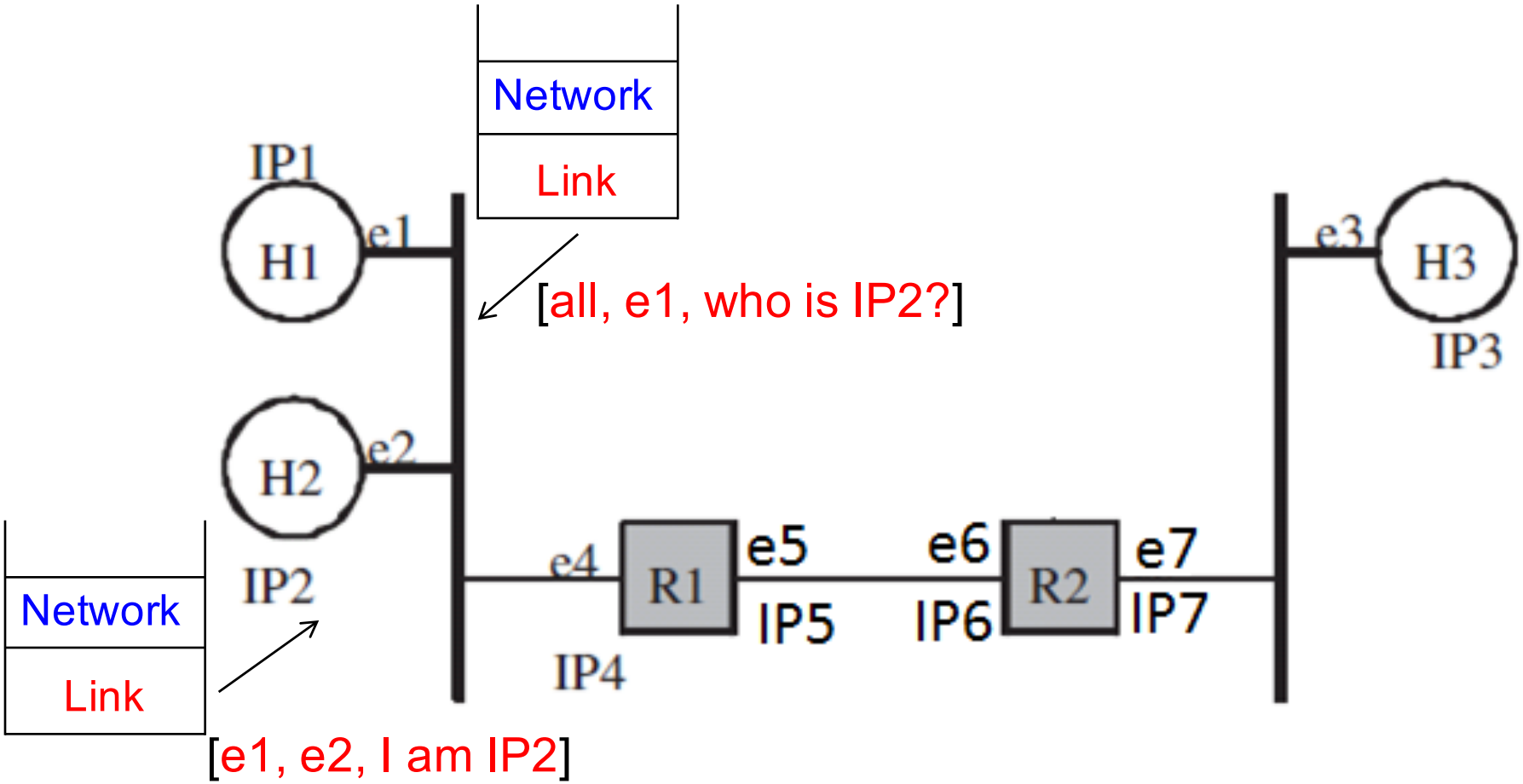

Link layer on H2 responds to the ARP query with its MAC address

Example: H1 wants to send packet to H2

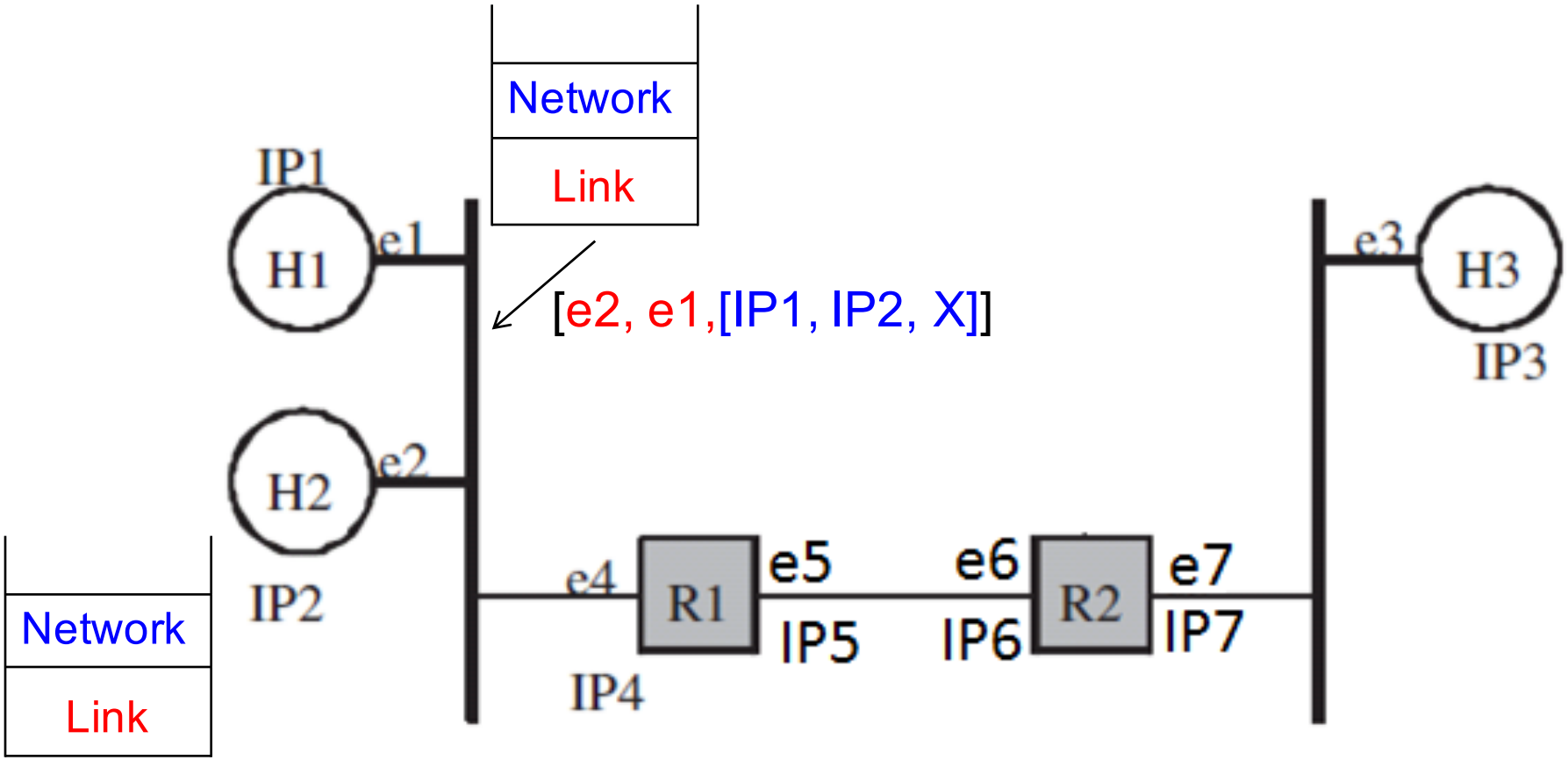

Once the link layer on H1 knows e2, it can now send the original message

Example: H1 wants to send packet to H2

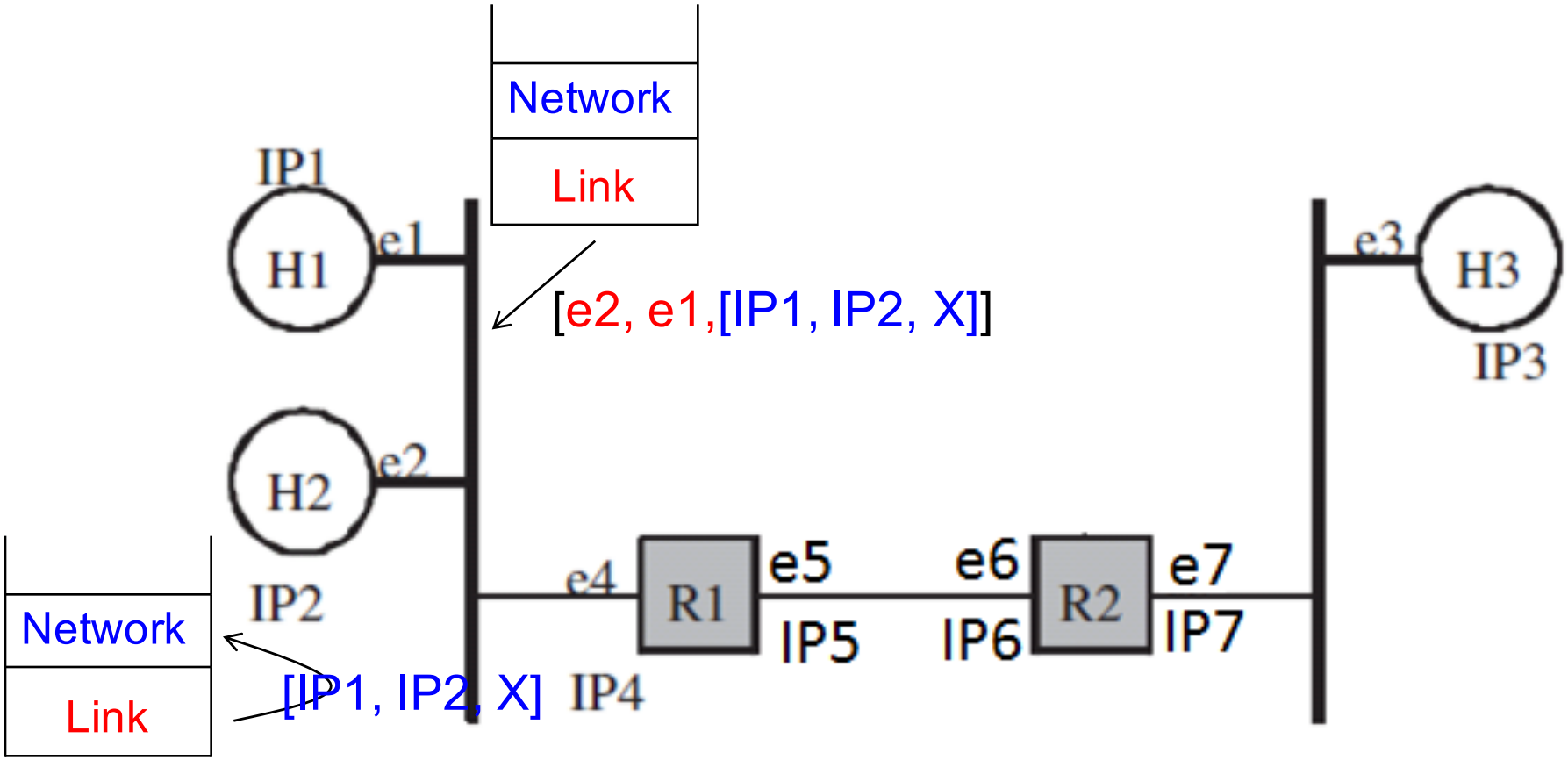

[e2, e1,[IP1, IP2, X]]

Link layer on H2 delivers the packet to the network layer on H2

5. re-compute routing table

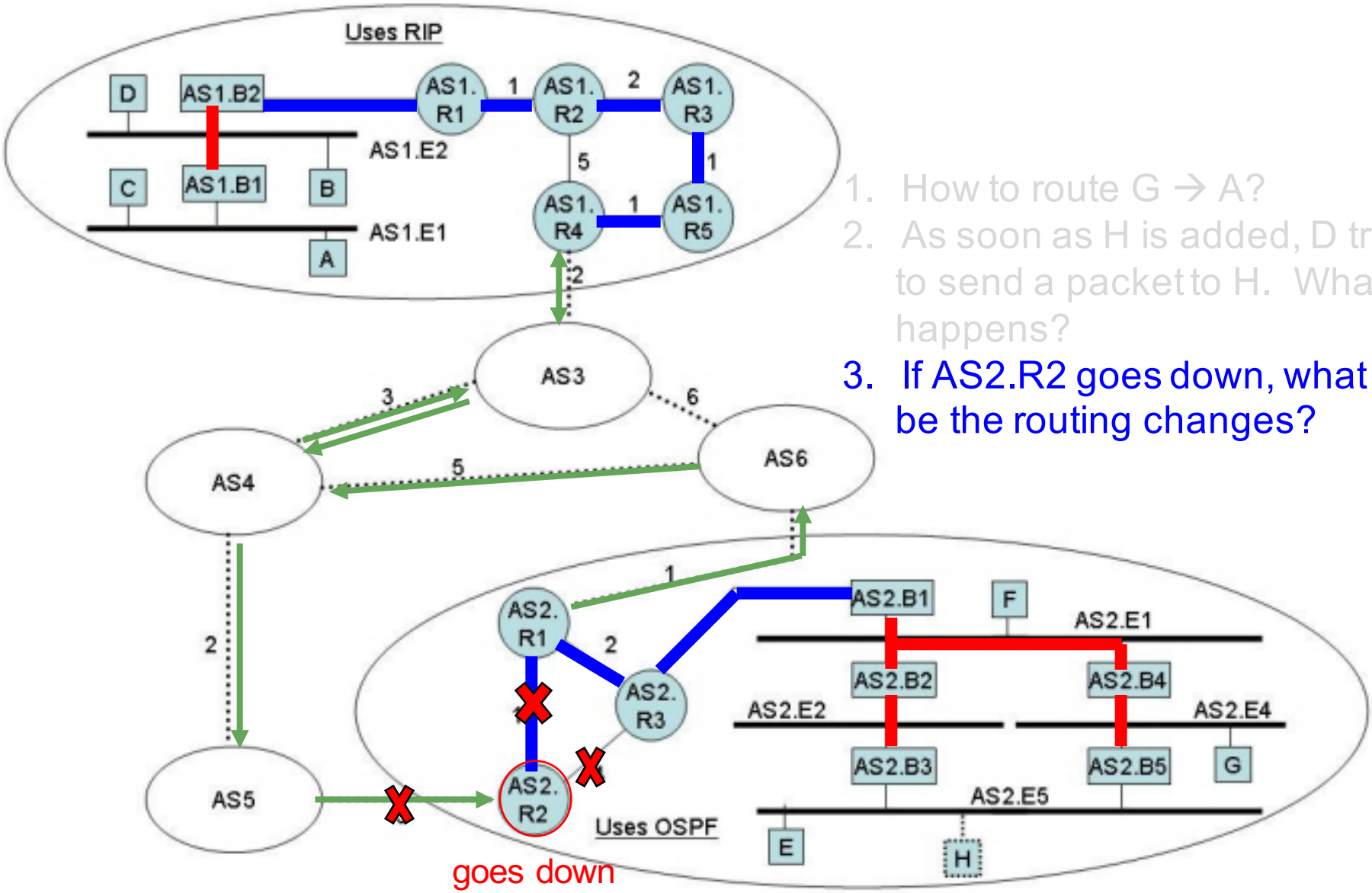

1. How to route G → A?
2. As soon as H is added, D tries to send a packet to H. What happens?
3. If AS2.R2 goes down, what will be the routing changes?

Figure 5.19: Figure for Routing Problem 3. [W&P 2010]

5. re-compute routing tables

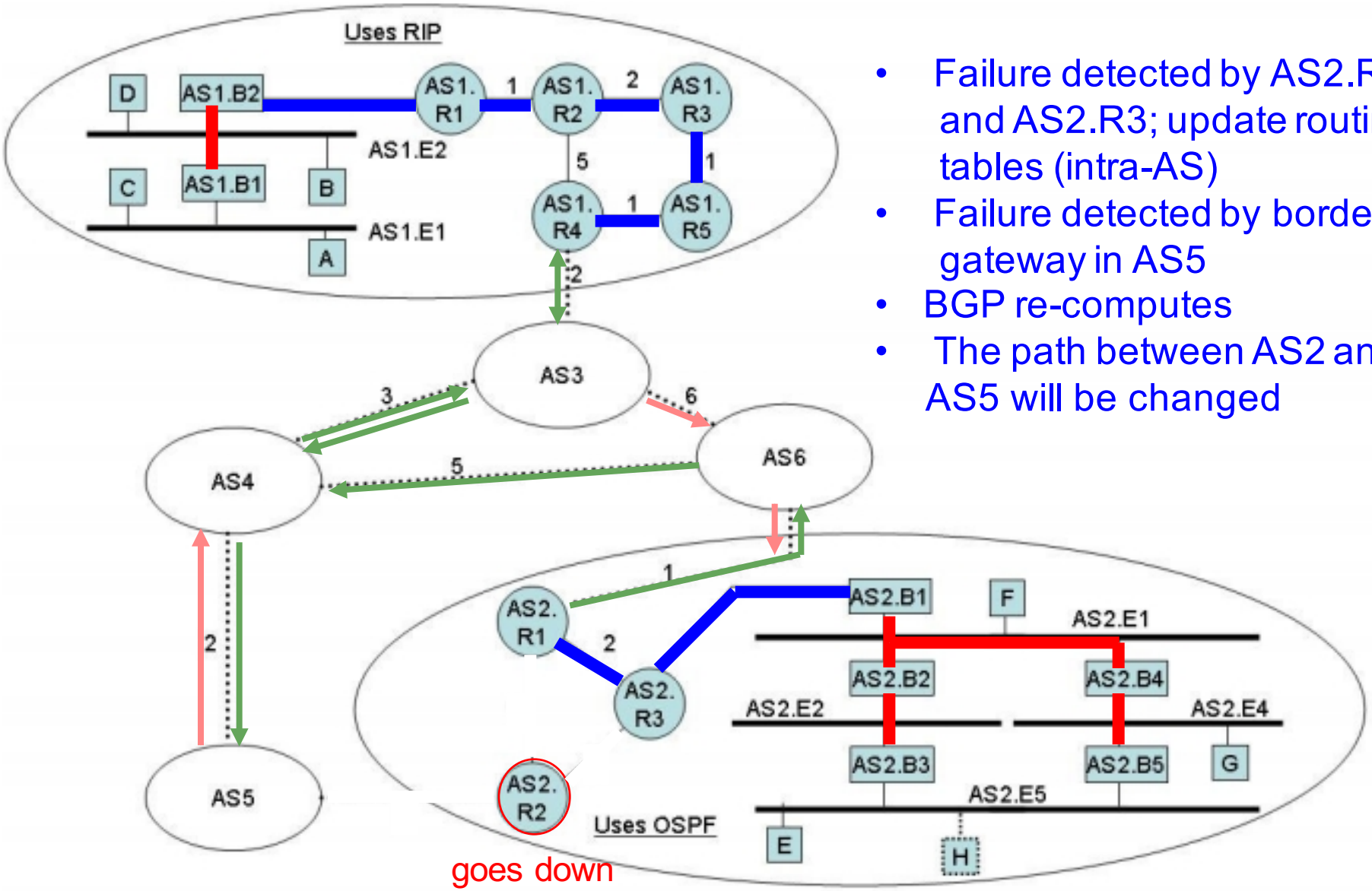

- Failure detected by AS2.R1 and AS2.R3; update routing tables (intra-AS)
- Failure detected by border gateway in AS5
- BGP re-computes
- The path between AS2 and AS5 will be changed

Figure 5.19: Figure for Routing Problem 3. [W&P 2010]

DHCP

- Motivations
  - Allows reuse of IP addresses
  - Enhances mobility, e.g., a laptop gets a new (local) IP address whenever it connects to a different LAN
- A DHCP server maintains a pool of available IP addresses
- A host that wants to connect to LAN requests a dynamic IP address of the DHCP server
- Once granted, the host periodically renew its IP
- When the host leaves and the IP address expires, the DHCP server puts the IP back into the available pool
- Host using dynamic IP cannot be a server

NAT

- Most home routers implement NAT (Network Address Translation)
- Motivations
  - Reuse of IP addresses
  - Security
- Devices on LAN (e.g. in home) use private IP addresses that are local in scope
- Outside world only knows the (static) IP address of the NAT box
- NAT translates to maintain end-to-end connection of a TCP flow
- How?

Protocol stack

Network mechanisms implemented as protocol stack

Each layer designed separately, evolves asynchronously

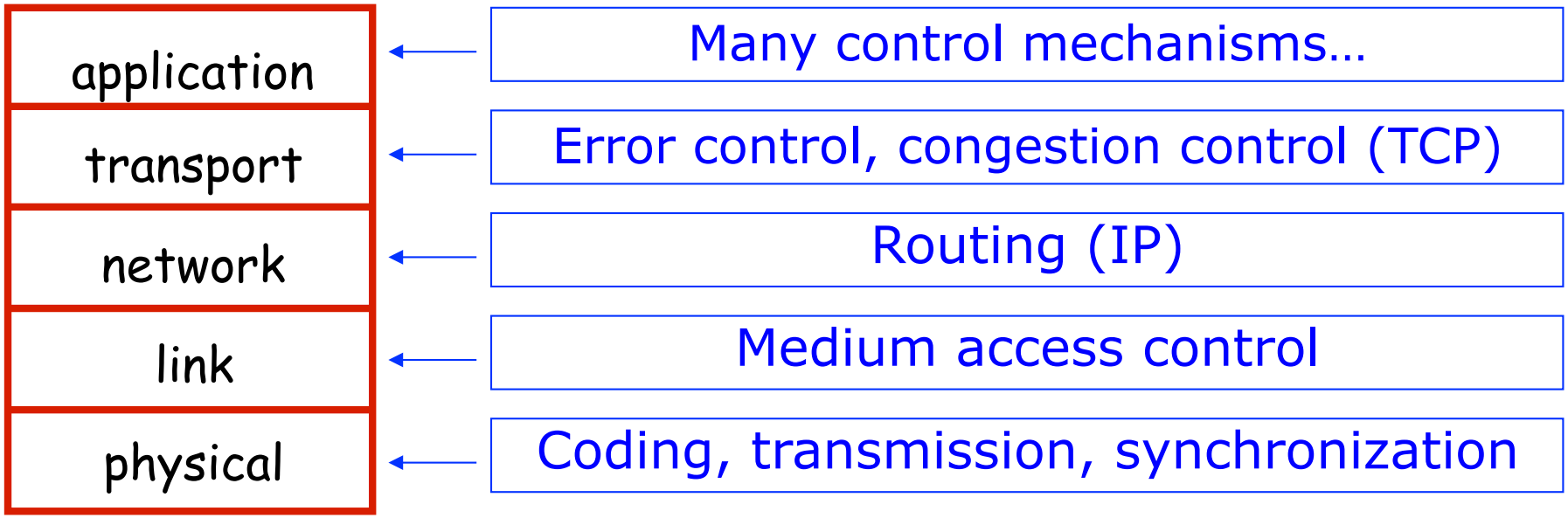

Transport services

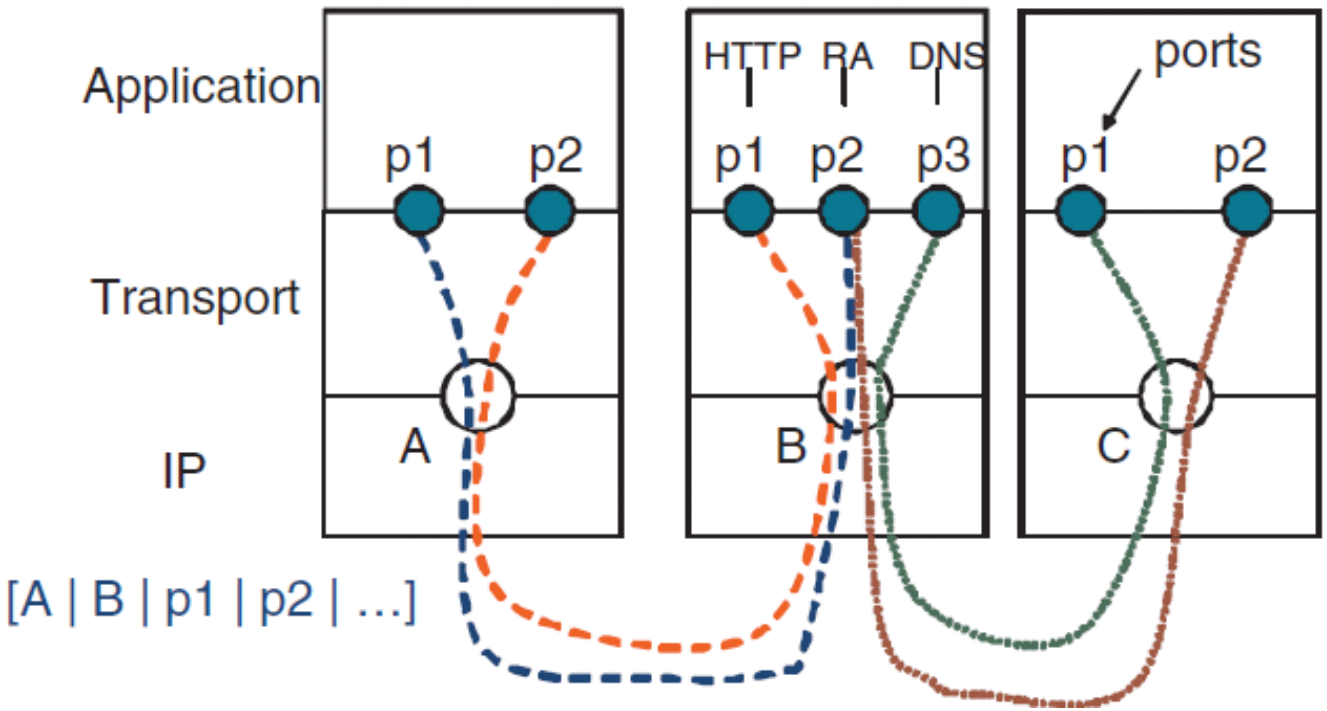

UDP
- Datagram service
- No congestion control
- No error/loss recovery
- Lightweight

TCP
- Connection oriented service
- Congestion control
- Error/loss recovery
- Heavyweight

[source IP | destination IP | source port | destination port | · · · | data].

NAT

<u>Key idea</u>

- A flow is specified by IP address + TCP port #
- NAT uses TCP port# to hide private IP

NAT

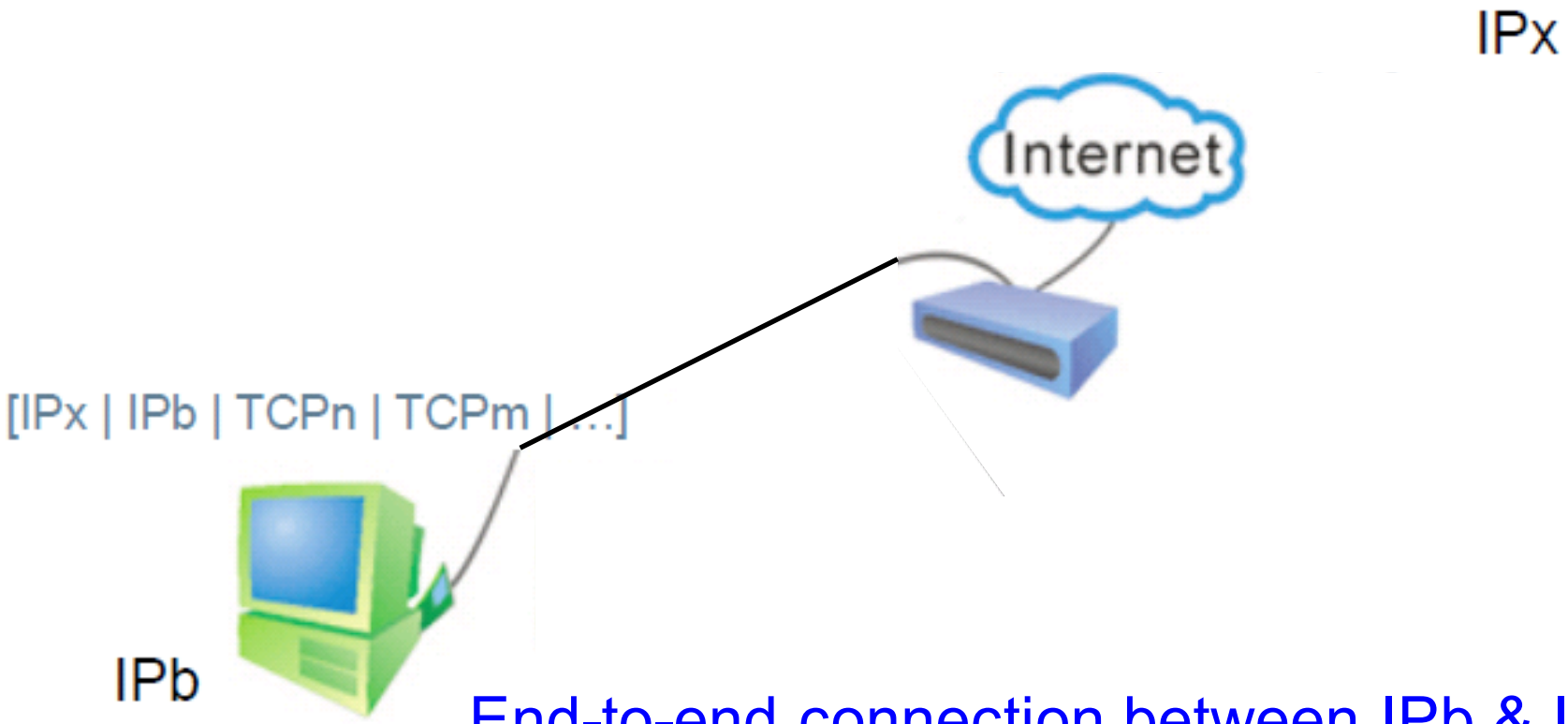

End-to-end connection between IPb & IPx without NAT

[source IP | destination IP | source port | destination port | $\cdots$ | data].

NAT

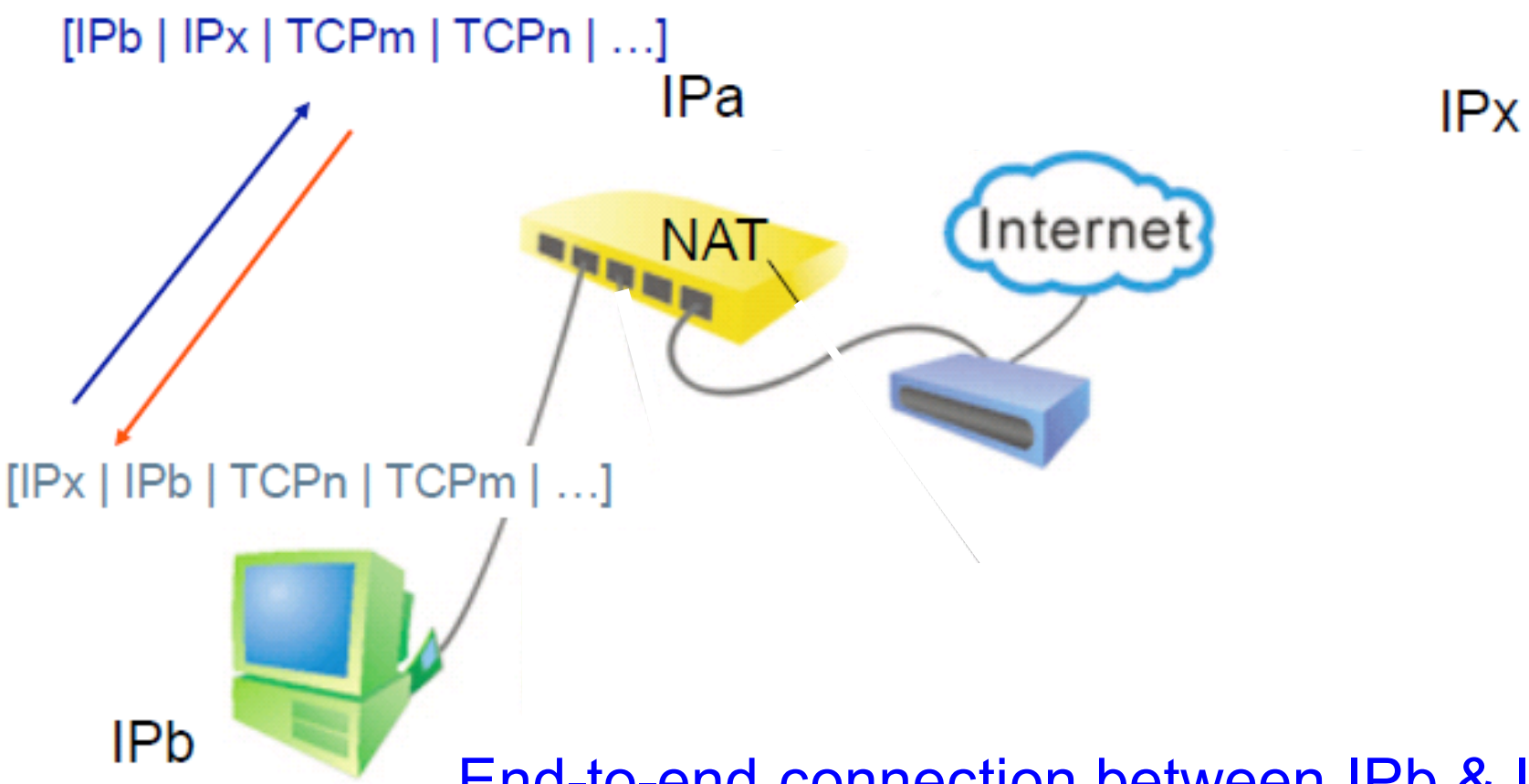

End-to-end connection between IPb & Ipx with NAT

[source IP | destination IP | source port | destination port | · · · | data].

NAT

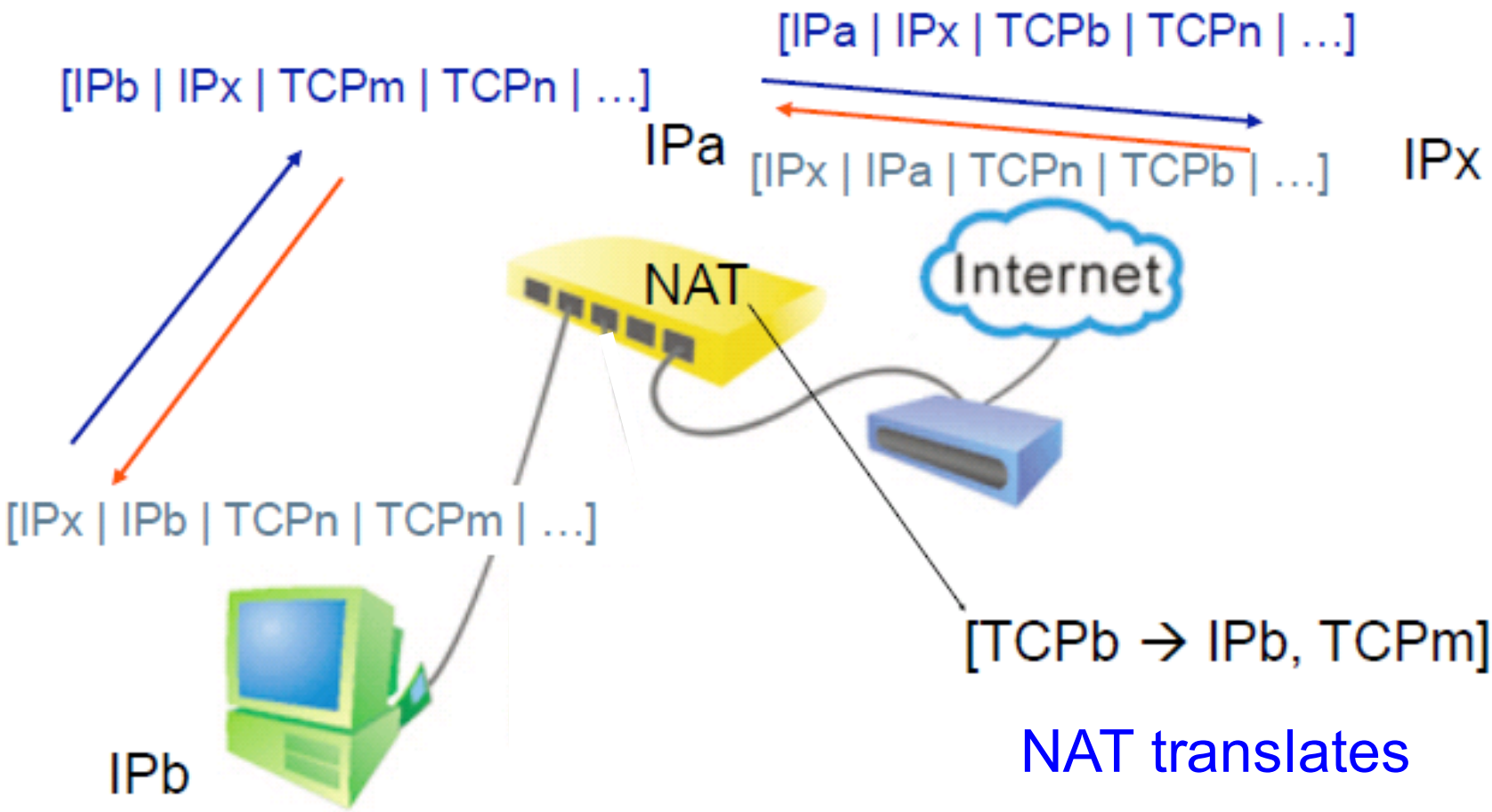

NAT translates

[source IP | destination IP | source port | destination port | · · · | data].

NAT

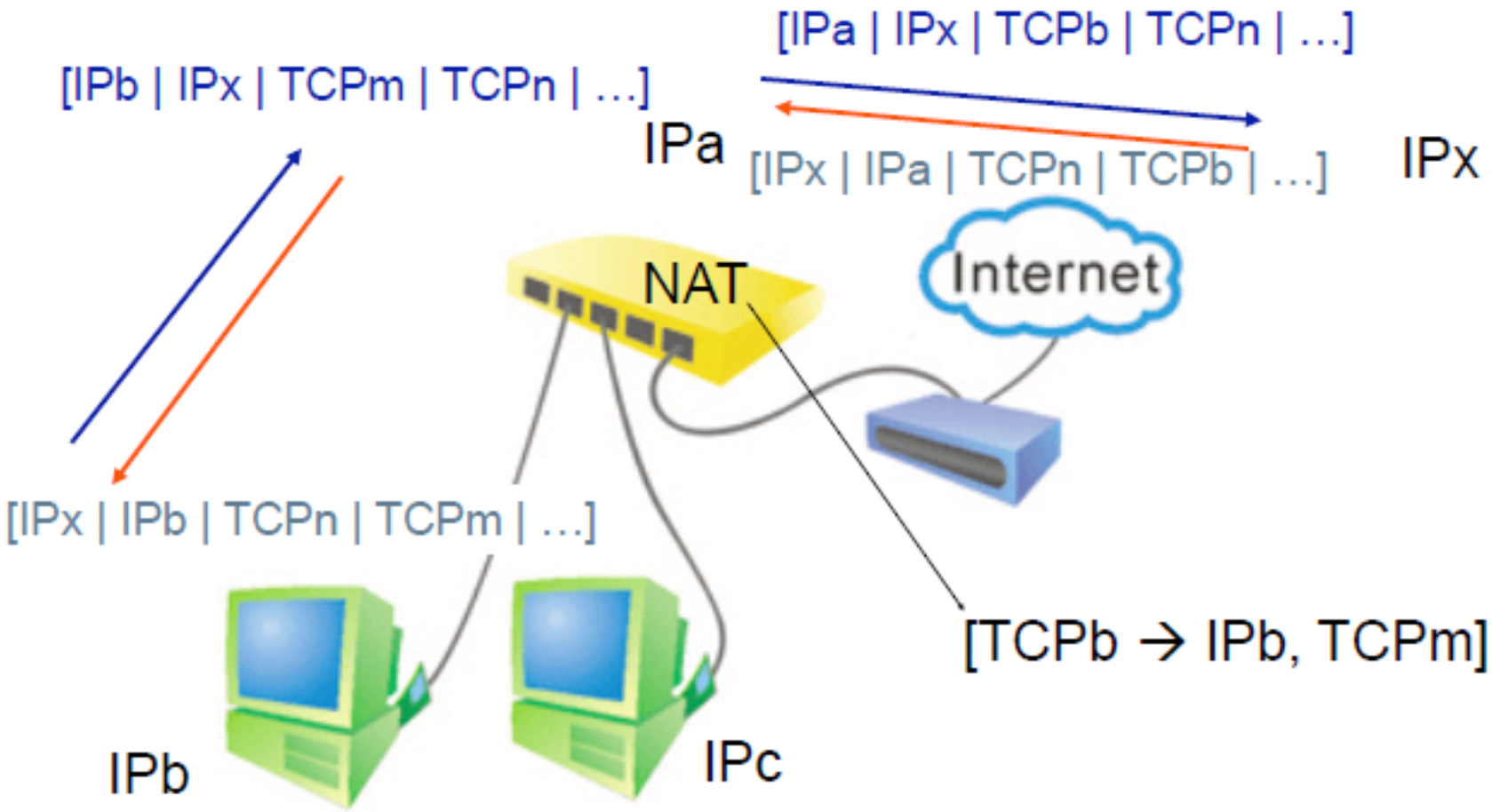
[IPa | IPx | TCPb | TCPn | …]
[IPb | IPx | TCPm | TCPn | …]
IPa
[IPx | IPa | TCPn | TCPb | …]
IPx
Internet
NAT
[IPx | IPb | TCPn | TCPm | …]
[TCPb → IPb, TCPm]
IPb
IPc

NAT

- Most home routers implement NAT (Network Address Translation)
- Motivations
  - Reuse of IP addresses
  - Security
- Devices on LAN (e.g. in home) use private IP addresses that are local in scope
- Outside world only knows the (static) IP address of the NAT box
- NAT translates to maintain end-to-end connection of a TCP flow
- Only home device can initiate connection to outside world (server)